Gavita **Pro** 6/750^{e} DE FLEX / 1000^{e} DE US 277-347

1 Introduction

Thank you for purchasing the Gavita Pro 6/750^{e} DE FLEX / 1000^{e} DE US 277-347. This manual describes the mounting and installing of the product and also describes how to use the product. Mounting and installing of the fixture may only be executed by certified service personnel. Please read and understand this manual completely before using the product. Only use the product as specified in this manual.

1.1 Used Symbols

Warning! A warning indicates severe damage to the user and/or product may occur when a procedure is not carried out as described.

Caution! A caution sign indicates problems may occur if a procedure is not carried out as described. It may also serve as a reminder to the user.

Note: A note gives additional information, e.g. for a procedure.

This symbol indicates that the reflector and lamp can reach very high temperatures (>85 °Celsius / >185 °Fahrenheit). Observe a cool down period before performing maintenance.

This symbol is an internationally recognized symbol used to designate recyclable materials.

This symbol is a certification mark employed on electronic products manufactured or sold in the United States which certifies that the electromagnetic interference from the device is under limits approved by the Federal Communications Commission.

This symbol shows that a product has been independently tested and certified to meet recognized standards for safety.

The symbol on the material, accessories or packaging indicates that this product may not be discarded as household waste. By disposing of the equipment in the proper way, you will be helping to prevent possible risks to the environment and public health, which might otherwise be caused by improper handling of the discarded equipment. Recycling of materials contributes to the conservation of natural resources. Therefore, please do not dispose of your old electronics and electrical appliances via household waste.

This symbol indicates the minimum distance (B) between the fixture (A) and the lit surface.

2 Product description

The Gavita Pro 6/750^{e} DE FLEX / 1000^{e} DE US 277-347 is an electronic horticultural fixture. It can drive one double ended high frequency type (electronic) high pressure sodium lamp:

750^{e} DE US: HPS 750 W 400 V.
Recommended lamp:
- Gavita Pro 750 W EL DE HPS

1000^{e} DE US: HPS 1000 W 400 V.
Recommended lamps:
- Gavita Pro Plus 1000 W EL DE HPS

The Gavita Pro 6/750^{e} DE FLEX / 1000^{e} DE US 277-347 is intended to be used in greenhouses or in climate rooms.

In this manual, the Gavita Pro 6/750^{e} DE FLEX / 1000^{e} DE US 277-347 will be referred to as: “the fixture”.

3 Product information and specifications

3.1 General product information

Product name	Gavita Pro 750e DE US 277-347	Gavita Pro 1000e DE US 277-347
Manufacturer	Gavita International bv	Gavita International bv
EAN Code	8718403052558	8718403052541
Part number	18.63.74.37.20	18.63.14.37.20
Plug type	Wieland RST20i3	Wieland RST20i3

3.2 Technical specifications

Product name	Gavita Pro 750e DE US 277-347		Gavita Pro 1000e DE US 277-347	
Input voltage +/-10%	277 V	347 V	277 V	347 V
Input wattage +/-3%	375-790 W		525-1200 W	
Apparent power +/-3%	382-806 VA		552-1225 VA	
Input current at 100%	2,9 A	2,5 A	3,8 A	3,1 A
Max current	3,5 A		4,9 A	
Inrush current:	< 40 A			
Power factor	> 0,98		0,98-0,95	
Product weight	3,8 kg / 8.4 lbs			
Dimensions (LxWxH)	56.5x24.5x19.5 cm / 22.2"x9.7"x7,8"(height excl. mounting hooks)			
Temperature case	< 70 °C / 158 °F;			
Temperature ambient	0 ~ 35 °C / 32 ~ 95 °F			
Relative humidity	< 70% (not condensating)			
Total Harmonic Distortion	< 10%			
Frequency	50 - 60 Hz			
Certification	UL 1598 & CSA C22.2, FCC Part 18, Class A			
Insulation	Class 1 - requires an earth connection / IP21			
Power inlet	Wieland RST 20i3 connector			
Ignition voltage:	4 kV			
Earth Leakage current	≤ 1 mA			

3.3 Compatible products and accessories

	Product name	Gavita partnumber
Replacement reflector	Ecomax HR96 DE	31.46.13.00
Compatible lamps	Gavita Pro 750 W EL DE HPS	26.74.19.11
	Gavita Pro Plus 1000 W EL DE HPS	26.10.16.12
Compatible cable plug	Wieland RST20i3 250V 3 pole female connector	63.70.11.50
Additional controller cable	Repeater bus connection kit	43.50.10.00

3.4 Environment

The product is intended to be used in greenhouses and climate rooms. The product can be used in damp environments. The product may not be used in wet environments or outdoors. The Gavita Pro 750 W and Pro Plus 1000 W EL DE HPS lamps function optimal when the ambient temperature is between 20 ~ 30°C / 68 ~ 86° Fahrenheit.

3.5 Legal

This device complies with Part 18 of the FCC Rules, designated as Class A. For industrial use only.
CSA approved according to: 252952.

4 Safety recommendations and warnings

⚠ **Warning!** Carefully read the warnings below before using or working with the product!

- Always adhere to the local rules and regulations when installing or using the fixture.
- Do not open or disassemble the fixture, it contains no servicable parts inside. Opening the fixture can be dangerous and will void the warranty.
- This product may cause interference to radio equipment and should not be installed near maritime safety communications equipment or other critical navigation or communication equipment operating between 0.45 - 30 MHz.
- Do not use the fixture when either its lamp or its power cord are damaged. Replace the power cord only with original certified cords. Replace the lamp only with lamps specified by Gavita (see paragraph 3.3).
- The use of other lamps may damage the product and lamp and will void the warranty.
- Modifications to the cords can lead to unwanted electromagnetic effects, which makes the product not comply with legal requirements.
- Do not expose the fixture to:
  - condensing humidity, heavy mist, fog or direct spray;
  - (ambient) temperatures outside the specified range;
  - dust and contamination;
  - direct sunlight during use or HID light that could heat up the ballast.
- Always disconnect the fixture from mains before performing any maintenance.
- Always allow for a cool down period of at least 30 minutes before touching the lamp or reflector. Touching the lamp or the reflector when the lamp is lit or immediately afterwards will result in severe burns!
- Never touch the lamp with bare hands as this will cause damage to the lamp.
- Do not use the fixture near flammable, explosive or reactive substances. The lamp and the reflector of the fixture reach temperatures of >85 °Celsius / 185 °Fahrenheit.
- Do not use sulfur vaporizers or water misters. Sulfur and calcium deposits on your reflector will decrease its efficiency.
- The installation and use of the fixture is the responsibility of the end user. Incorrect use or installation can lead to failure and damage to the fixture. Damage to the fixture and electronic circuitry as a result of incorrect installation and use revokes the warranty.

5 Contents (1)

A. Gavita Pro 6/750e DE FLEX / 1000e DE US 277-347
   1. Electronic ballast
   2. Lamp bracket
   3. Lever to unlatch reflector
   4. Lamp socket (2x)
   5. Reflector Gavita HR96 DE*
   6. Mounting points

   *The reflector is delivery dependent, it may differ from the image
B. Gavita Pro 750 W EL DE HPS / Gavita Pro Plus 1000 W EL DE HPS lamp
C. Interconnect cable 6PC6 modular jack
D. Dummy
E. Wieland RST20i3 female connector with open end cable

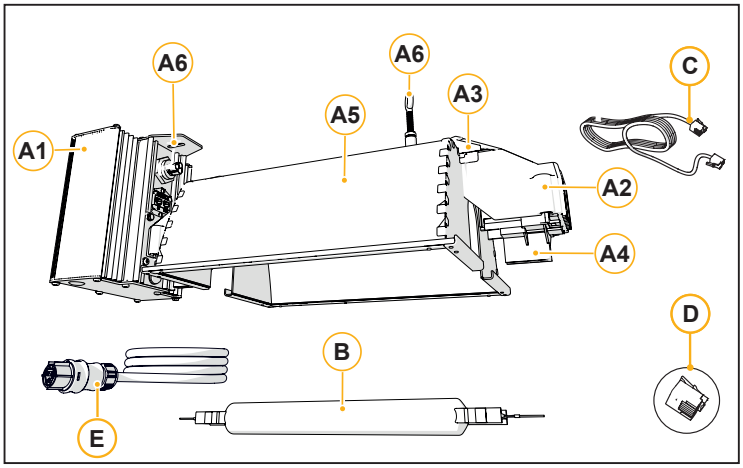

1.

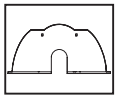

Gavita HR96 DE

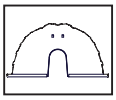

Gavita MD 135 DE

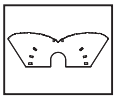

Gavita W 150 DE

6 Controls, connections and indications (2)

A. Wieland RST20i3 male connector
   1. Ground connection
   2. Phase / neutral connections
B. Gavita 2xRJ connector
   1. RJ IN
   2. RJ OUT
C. Status LED

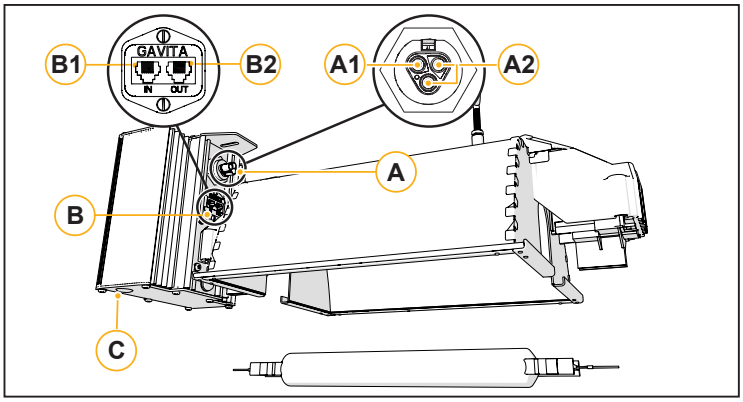

2.

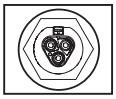

Wieland RST20i3

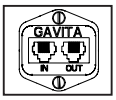

Gavita 2xRJ

7 Installation

⚠ **Warning!** Mounting and installing of the fixture may only be executed by certified service personnel, in accordance with the applicable local laws and regulations.
⚠ **Warning!** The fitter is responsible for correct and safe installation.
⚠ **Warning!** Ensure the local cabling can support the voltage and current requirements of the fixture.
⚠ **Warning!** Avoid coiled cords and keep mains leads separated. This prevents electromagnetic interference.
⚠ **Warning!** Do not connect or disconnect the Wieland RST20i3 plug under load.

7.1 Installation preparations

- Switch off mains power.
- Read the Gavita light distribution plan.
- If not done already, install the lamp in the fixture (see paragraph 10.2).
- If not done already, screw the mounting point into the fixture (3).

7.2 Installing the fixture

- Mount the suspension bracket* according to the light distribution plan.
- Hang the fixture by its two mounting points onto the suspension bracket (4). The two mounting points are spaced 30 - 32 cm / 11.81 - 12.59 inches apart.

⚠ **Caution!** Always hang the fixture horizontally. Adjustments can be made by screwing the mounting point in or out.

To install other fixtures, repeat the steps at paragraph 7.1 and 7.2.

* The suspension bracket is delivery dependent, it may differ from the image.

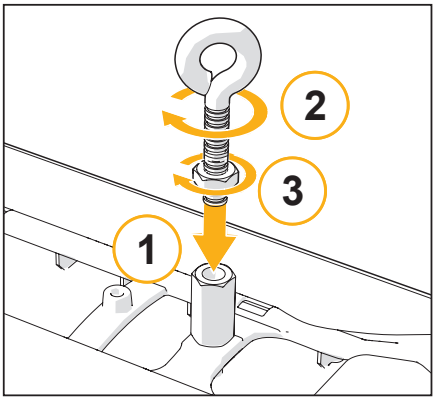

3.

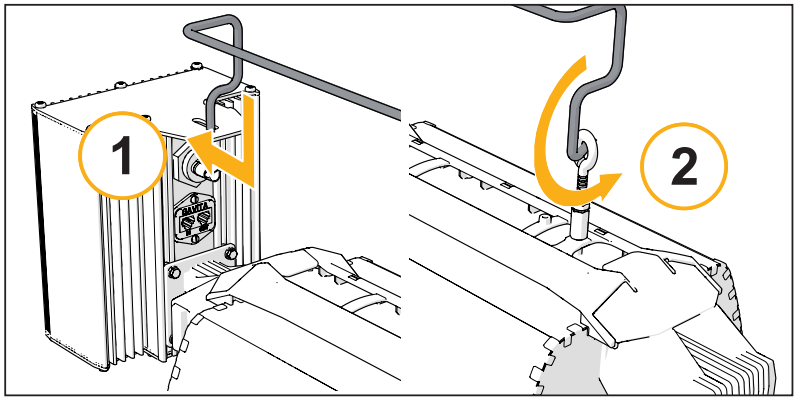

4.

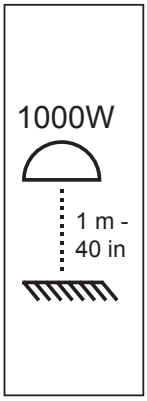

5.

7.3 Content *Not included

The Repeater bus connection kit contains the following items:

1. 2 x EMC ferrite snap-on black bag
2. 4 x Gavita splitter 1 to 2 6P6C grey RJ
3. 8 x grey modular jack interconnect cable 6P6C RJ
4. 8 x SNAP-ON ferrite grey
5. Interconnect cable 6p 82 ft (25mtr) grey

7.4 Preparation for use with a controller

Using a daisy chain setup, a maximum of 100 fixtures can be connected to one controller. Up to 500 fixtures per daisy chain can be connected when using splitters. See section 7.4 and 7.5 of this manual and the manual of the controller.

- Take the unstripped black interconnect cable.
- Cut the cable (supplied with controller) to the desired length and strip both ends using a crimp tool (fig. 6).
- Insert the cable end in the RJ connectors (fig. 7) and use the crimp tool to finish the assembly.
- Mount ferrite cores (item 1. mentioned in Content) to both cable ends close to the RJ connectors (fig. 8).

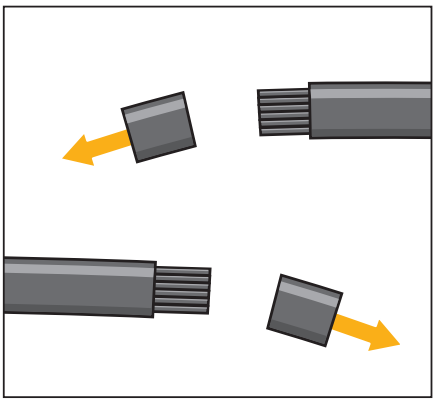

6.

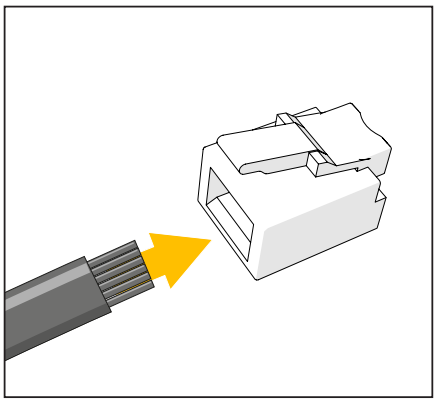

7.

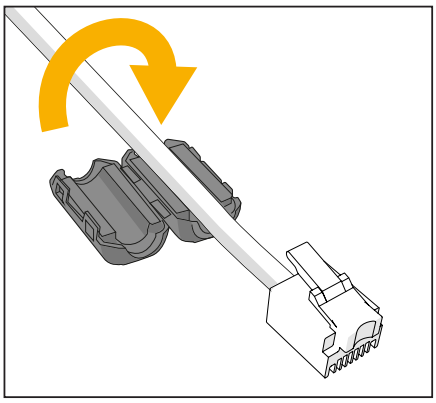

8.

7.5 Connecting up to 100 fixtures

- Remove the dummy from the input port on the first fixture (fig. 9).

Note: Keep the dummy in a safe place! The dummy is necessary to operate the fixture in standalone mode.

- Use the black controller cable (item is supplied with controller) to connect the controller input port on the first fixture (fig. 10A).
- Remove the dummy from the input port on the second fixture.
- Use a grey 6PC6 modular jack interconnect cable (item 3.) with integrated ferrite cores to connect the output port of the first fixture to the input port of the second fixture (fig. 10B). The indicator light will blink when the connection is successful.
- Repeat these steps to connect up to 100 fixtures (fig. 10C).

Warning! Ensure the power cord and the controller cables do not touch any of the reflectors.

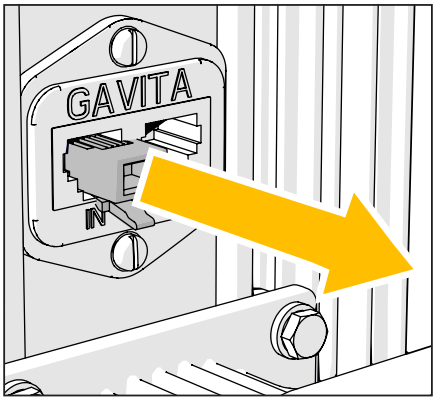

9.

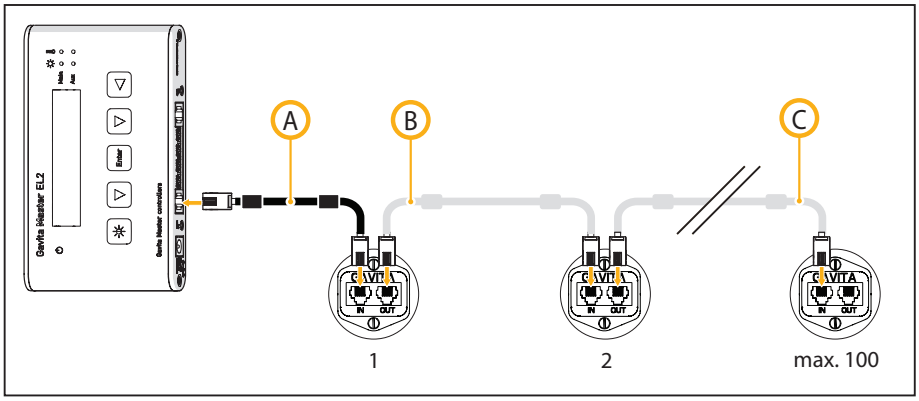

10.

7.6 Connecting up to 500 or 1000 fixtures

Using a setup with daisy chained splitters, up to 500 fixtures on EL1 and 1000 fixtures on EL2 (over two channels) can be connected as shown in fig. 11.

- Use the black controller cable (item comes with the controller) to connect the primary channel of the controller to the input port of the first splitter (fig. 11A).
- Remove the dummy from the input port of the fixtures (fig. 9).

Note: Keep the dummy in a safe place! The dummy is necessary to operate the fixture in standalone mode.

- Use a grey 6PC6 modular jack interconnect cable (item 3.) to connect the output port of the splitter to the input port of the first fixture (fig. 11C).
- Use a grey 6PC6 modular jack interconnect cable (item 3.) to connect the output port of the first fixture to the input port of the second (fig. 11D).
- Repeat these steps to connect up to 100 fixtures per splitter output port (fig. 11E). Up to 500 fixtures can be connected to the primary channel.
- Snap-on two grey ferrite cores (item 4.) on the grey interconnect cable (item 3.) close to the 6P6C plugs.
- Use the grey 6PC6 modular jack interconnect cables (item 3.) to connect the outport of a splitter to the inport of the next (fig. 11B).
- Use the black secondary channel (item comes with controller) (fig.11G) to connect another 500 fixtures, in the same way the fixtures are connected to the primary channel.

Warning! Ensure the power cord and the controller cables do not touch any of the reflectors.
Warning! Distribute number of fixtures evenly over daisy chains.
Warning! Ensure the repeater bus connections are integrated in a correctly set up installation for best results.
Warning! Boosters should never be used to expand.

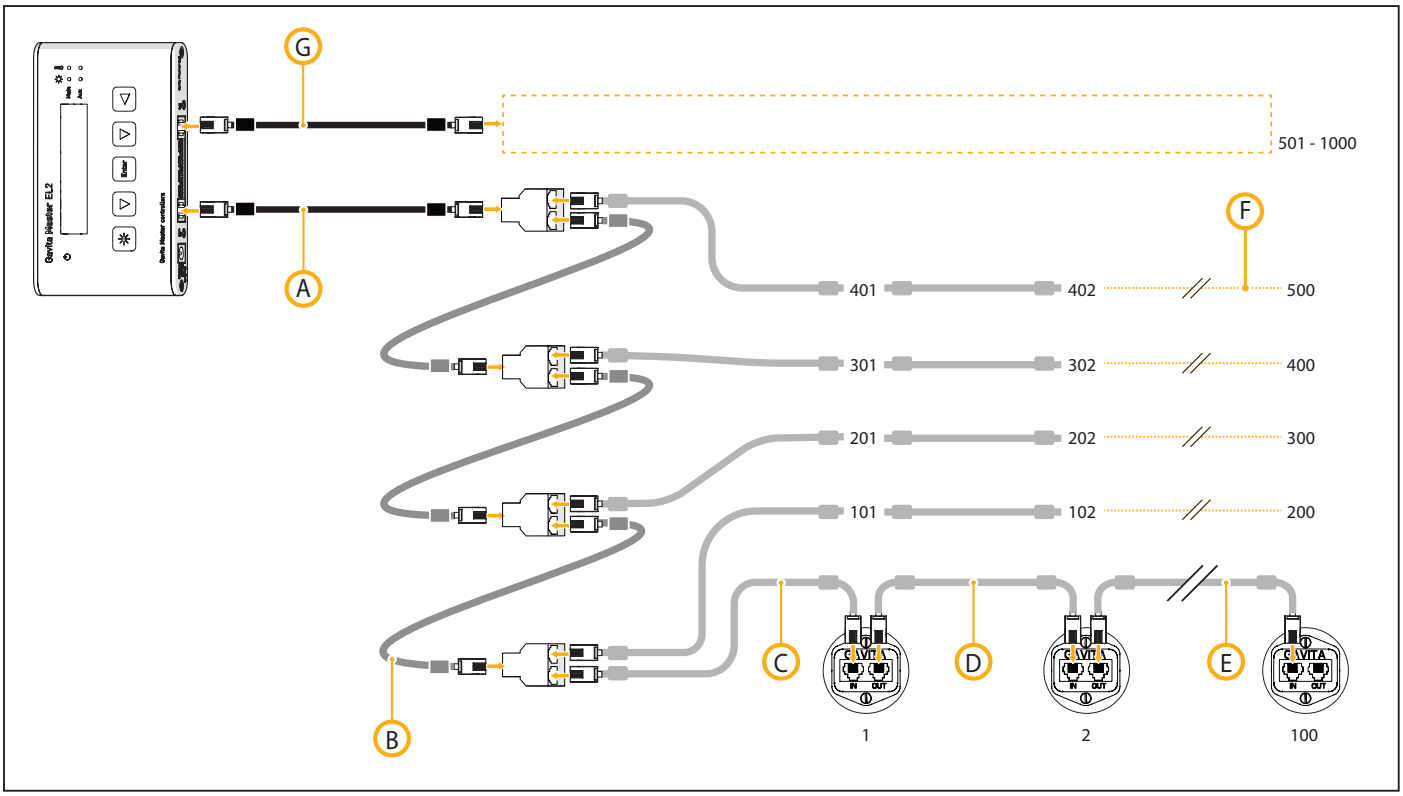

11.

7.7 Connecting the fixture to the mains

⚠ **Warning!** Make sure mains power is switched off.
⚠ **Warning!** Always install the lamp before connecting the fixture to the mains.
⚠ **Warning!** Ensure the cord is not coiled and does not touch any hot surfaces.
⚠ **Warning!** Connect the cables according to local rules, safety regulations and electrical code.
⚠ **Warning!** Ensure external switching gear can cope with the inrush current of the fixture (see paragraph 3.2). Always use a double pole contactor suitable for switching a capacitive load. Never use household timers to switch the fixture!

- Plug the Wieland RST20i3 female connection onto the Wieland RST20i3 male connection on the fixture (17).
- Switch on mains power.

⚠ **Warning!** Do not connect or disconnect the Wieland RST20i3 plug under load.

To install a new power cord:
- Remove the top part of Wieland RST20i3 female connector from the bottom part (12).
- Pull the mains cable through the bottom part (13).
- Strip the wiring (14).
  The insulation strip length is 8 mm / 0.31" and the dismantling length is 32 mm / 1.26".
- Connect the wiring to the top part connections (15).
  Cable description:

Wire	277V/347V
White	Neutral (N)
Black	Phase (L)
Green	Ground (⏚)

- Slide the top part into the bottom part and tighten the gland nut (16).

Note: When the parts connect correctly, you will hear a 'CLICK' sound.

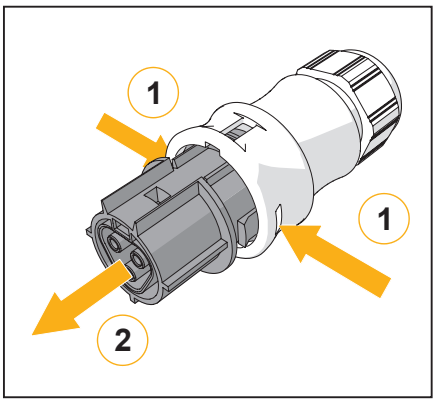

12.

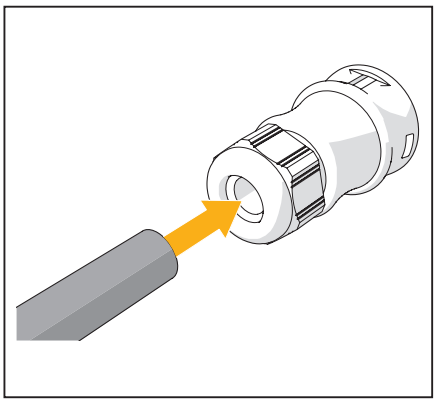
13.

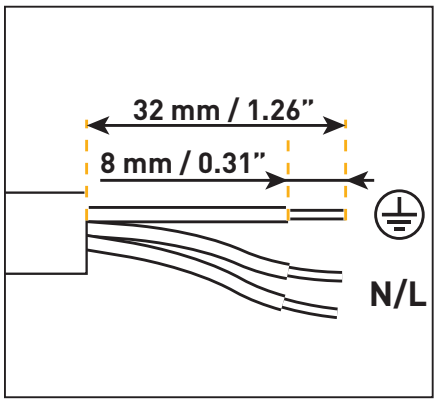

14.

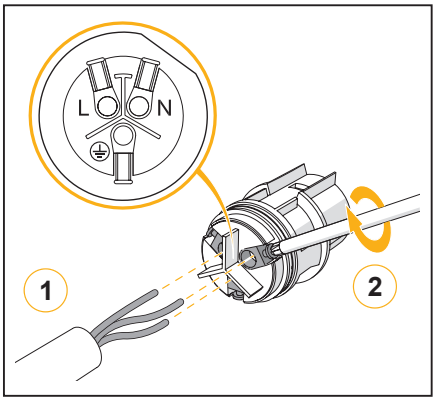

15.

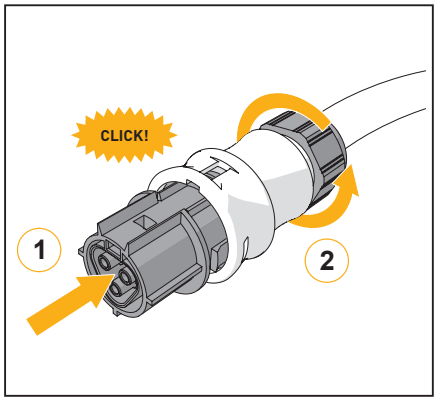

16.

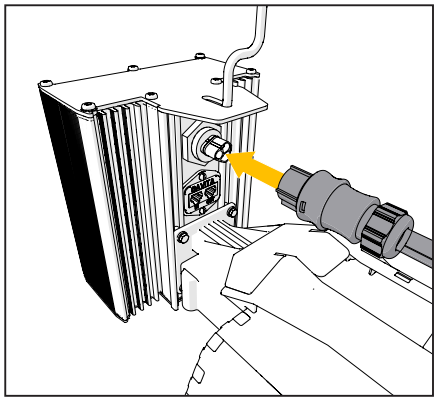
17.

8 Precautions when using the fixture

⚠ **Warning!** Never use the fixture without a lamp or reflector!
⚠ **Warning!** Always wait 20 - 30 minutes for the reflector to cool down!
⚠ **Caution!** Before you dim or boost your HPS lamp, make sure that you run it at nominal value (100%) for at least 100 hours to stabilize the lamp. Failing to do so may lead to sub-optimal light levels and premature end of life failure of your lamp.

9 Troubleshooting using the status LED

Note: The status LED is present at 400 V models only.

The status LED provides information on the condition of the lamp and electronic ballast. Consult table 1 to interpret the status LED. LED signals are represented by colored red dots.

9.1 Status indications

Status LED message	Status fixture	Description	Action/Solution
●●●●●●●●●●●●	No power / off	The fixture is not connected to the mains or the power is off	Check power
●●●●●●●●●●●●	Ballast stand-by	Fixture is connected to the mains and to a controller. Output of ballast is off	
●●●●●●●●●●●●	Ballast on	Fixture is connected to the mains and to a controller. Output of ballast is on	
●●●●●●●●●●●●	Fixture is igniting the lamp	Fixture is trying to restart the lamp	No action required. When lamp doesn't start: Lamp too hot, defect or not properly connected (remote). Disconnect, check power cord and connections

Table 1

9.2 Error or warning indications

Status LED message	Status fixture	Description	Action/Solution
●●●●●●●●●●●●	Too low voltage	Input voltage is too low	Check mains voltage
●●●●●●●●●●●●	Too low voltage occured in past		See above, reset
●●●●●●●●●●●●	Too high voltage	Input voltage is too high	Check input voltage, check wiring and connection, check neutral in 3 phase systems
●●●●●●●●●●●●	Too high voltage occured in past		See above, reset
●●●●●●●●●●●●	Too high temperature	Electronics temperature is too high (max. 115 °Celsius)	Disconnect from mains. Check installation, clean ballast, check environment temperature (max 35 °Celsius). Make sure fixture is not heated by HPS lamp light. Wait untill the lamp is cooled down, then reconnect to mains
●●●●●●●●●●●●	Too high temperature occured in past		See above, reset
●●●●●●●●●●●●	No signal from controller	Fixture is connected to the mains and set to EXT but there is no signal on the control input.	If a controller is connected, search for loose connections, defect contacts or short-circuits.

Table 2

10 Inspection, maintenance and repair

⚠ **Warning!** Disconnect the product from mains before performing any maintenance or repairs.
⚠ **Warning!** Do not connect or disconnect the Wieland RST20i3 plug under load.
⚠ **Warning!** Do not open or disassemble the fixture, it contains no servicable parts inside. Opening the fixture can be dangerous and will void the warranty.
⚠ **Warning!** Always allow for a cool down period of at least 30 minutes before touching the lamp or reflector.
⚠ **Caution!** Do not clean the fixture with detergents, abrasives or other agressive substances.
⚠ **Caution!** Do not touch the inside of the reflector.
Note: Gavita recommends to measure the lamp and reflector for aging every year. Replace the lamp and/or reflector when they are aged.

- Regularly check the fixture for dust or dirt buildup. Clean if necessary. Contamination may cause overheating and decreased performance.
  - Clean the inside of the reflector with soapy water, but use demineralised water to rinse the reflector;
  - Clean the electronic ballast and the outside of the fixture using a dry or damp cloth.
- Check the lamp monthly for discolorations or black markings. Always replace a damaged lamp.

Note: Before initial use, the lamp could have black markings. This will disappear when the lamp runs on full power. If not, replace the lamp.

- Regularly check the wiring of the product to ensure it is undamaged.

10.1 How to disconnect the Wieland RST20i3 plug

⚠ **Warning!** Do not connect or disconnect the Wieland RST20i3 plug under load.

- Switch off mains power.
- Press the pin on the Wieland RST20i3 male connection downwards and pull the Wieland RST20i3 female connection from the fixture (18).

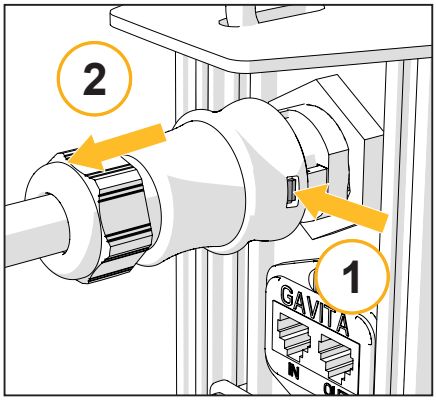

18.

10.2 Placement and replacement of the lamp

⚠ Warning! Always allow for a cool down period of at least 30 minutes before touching the lamp or reflector.
⚠ Caution! Do not touch the lamp with bare hands as this will damage the lamp. Always use a fabric glove to handle the lamp.
⚠ Caution! Only use lamps specified by Gavita (see paragraph 3.3).
Note: Gavita recommends replacing the lamp after 10000 lighting hours.

- Switch off mains power.
- Hold the lamp with a fabric glove to prevent it from falling. Use a protective glove if the lamp is damaged.
- Open the lamp holders by sliding them outwards (19).
- Carefully take the lamp out of the fixture (20).
- Install the new lamp with the getter (A) near the ballast 21), with the glass vacuum seal pointed downwards (Philips lamp) or sideways (Gavita lamps).
  Both lampwires need to be placed straight into the lamp holder and need to touch the metal part of the lamp holder.
- Close the lamp holders by sliding them inwards (22).
- Switch on mains power.

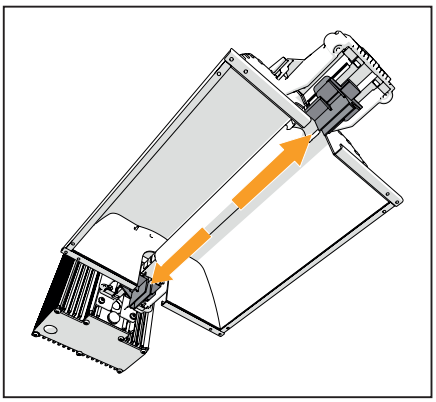

19.

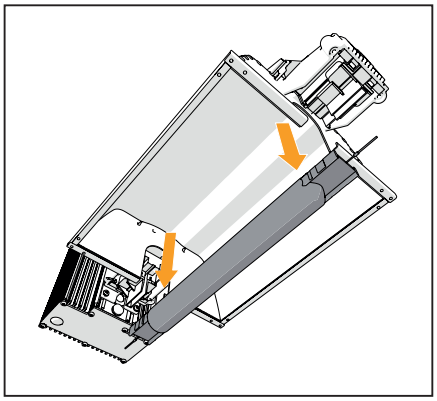

20.

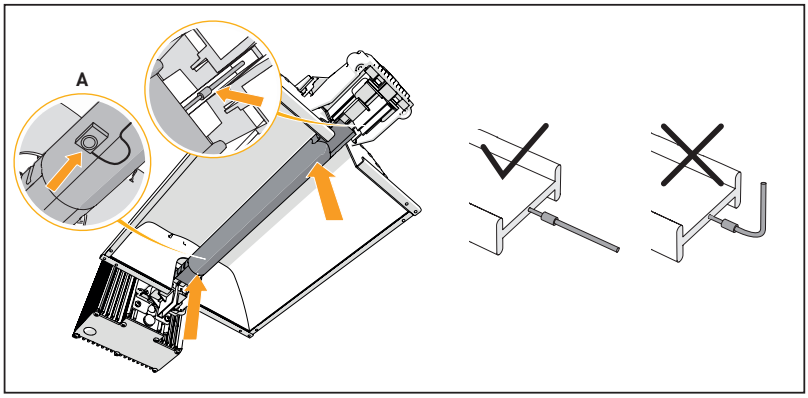

21.

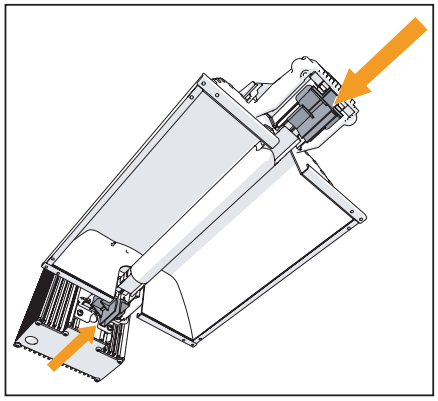

22.

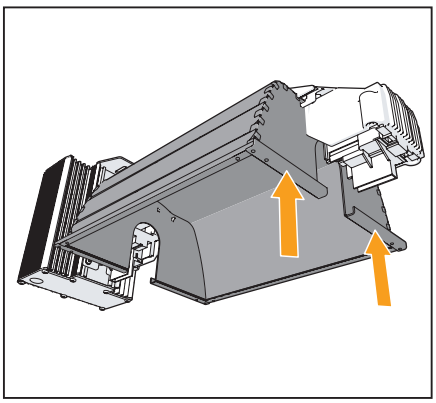

23.

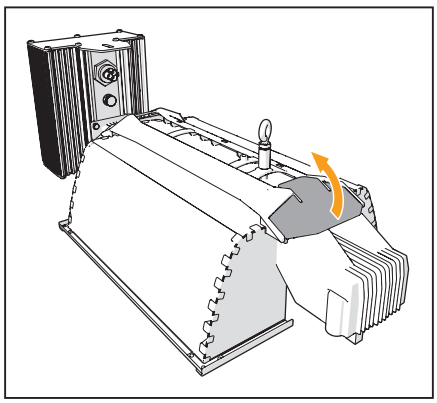

24.

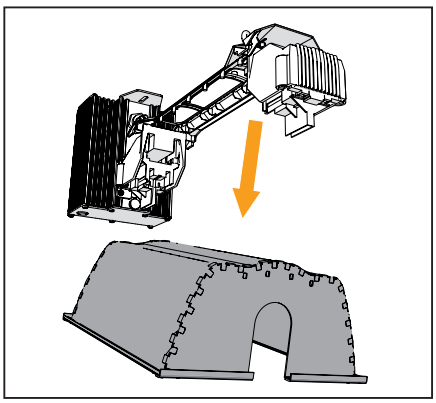

25.

10.3 Placement and replacement of the reflector

⚠ **Warning!** Always allow for a cool down period of at least 30 minutes before touching the lamp or reflector.

ⓘ **Note:** Gavita recommends replacing the reflector* after 10000 lighting hours.

Depending on the environment and contamination levels the reflector will degrade. The vega/Miro™ aluminum can be cleaned (see chapter 10), but we recommend to change the reflector every two to four years. Also replace the lamp when replacing the reflector.

* The reflector is delivery dependent, it may differ from the image.

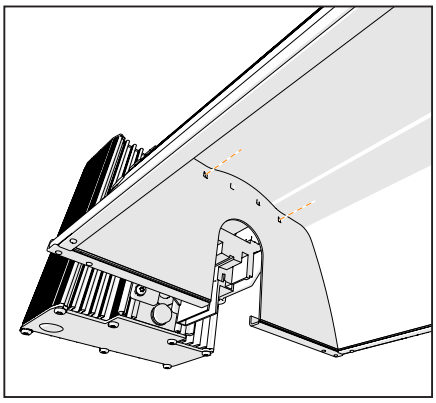

26.

- Switch off mains power.
- Remove the lamp from the fixture (see paragraph 10.2).
- Support the reflector on the side of the reflector lever to prevent it from falling (23).
- Move the reflector lever up to retract the two pins holding the reflector in place (24).
- Remove the reflector (25).
- Place the new reflector. Ensure the reflector lever is in the opened position to allow the reflector to pass.
- Ensure the holes in the reflector are aligned with the pins in the fixture (26).
- Release the reflector lever so its two pins hold the reflector in place.
- Insert the lamp in the lamp holder (see paragraph 10.2).
- Switch on mains power.

11 Storage and disposal

- Store the fixture in a dry and clean environment, with an ambient temperature of -20 ~ 85 °Celsius / -4 ~ 185 °Fahrenheit.
- The product must not be discarded as unsorted municipal waste, but must be collected separately for the purpose of treatment, recovery and environmentally sound disposal.

⚠ **Caution!** The lamps are chemical hazardous waste and must be delivered to the designated authorities.

⚠ **Caution!** The lamp contains mercury.

12 Warranty

Gavita International bv warrants the mechanical and electronic components of their product to be free of defects in material and workmanship if used under normal operating conditions for a period of three (3) years from the original date of purchase. If the product shows any defects within this period and that defect is not due to user error or improper use Gavita International bv shall, at its discretion, either replace or repair the product using suitable new or reconditioned products or parts. For HPS lamps the warranty period is one (1) year from the original date of purchase. In case Gavita International bv decides to replace the entire product, this limited warranty shall apply to the replacement product for the remaining initial warranty period, i.e. three (3) years from the date of purchase of the original product. For service return the fixture to your shop with the original sales receipt.

Manual: 6/750e DE FLEX / 1000e DE US 277-347
Changes reserved - Version 18/20

GAVITA International bv
Oosteinderweg 127
1432 AH Aalsmeer
The Netherlands

Tel : +31(0)297-380 450
Fax : +31(0)297-380 451
E : info@gavita.com
W : www.gavita.com