HI-E DRY 195

Installation, Operation and Maintenance Instructions

– Read and Save These Instructions –

This manual is provided to acquaint you with the dehumidifier so that installation, operation and maintenance is successful. Ultimate satisfaction depends on the quality of installation and a thorough understanding of this equipment. The dehumidifier is built around tested engineering principles and has passed a thorough inspection for quality of workmanship and function.

HI-E *Dry* 195:

- Controlled by a digital dehumidistat with settings from 20 to 80 percent relative humidity and a positive “on” and “off” setting.
- Portable and provided with four casters.
- Contains an internal condensate pump capable of lifting condensate 17 feet and 33 feet of condensate hose.
- Wiring is through a factory installed six foot power cord; 115 volt with ground.
- Environmentally friendly R410A refrigerant.

Water Removal Rates (Pints/Day)	
370 pints	90°F, 90%
293 pints	80°F, 80%
195 pints	**80°F, 60% (AHAM)**
160 pints	70°F, 60%
120 pints	70°F, 50%
97 pints	55°F, 75%
63 pints	60°F, 50%
35 pints	45°F, 70%

QUEST DEHUMIDIFIERS

Therma-Stor® LLC
Driven by performance. Powered by design.™

4201 Lien Rd
Madison, WI 53704
www.QuestClimate.com

Phone 608-237-8400
Toll-Free 1-877-420-1330
info@QuestClimate.com

Table of Contents

Safety Precautions 3
1. Specifications 4
2. Installation 4
2.1 Location 4
2.1A In humid area, no ducting 5
2.1B In humid area, duct inlet and/or outlet 5
2.1C In remote area, duct inlet & outlet 5
2.1D In remote area, duct inlet only 5
2.2 Electrical Requirements 5
2.3 Condensate Removal 5
2.4 Ducting 5
2.4A Optional Ducting 5
2.4B Ducting for Dehumidification 6
2.4C Ducting for Fresh Air 6
3. Operation 6
3.1 Humidity Control Adjustment 6
3.2 Fan Mode ON 7
3.3 Purge Water 7
3.4 Defrost Control 7
3.5 Power Down 7
4. Maintenance 7
4.1 Air Filter 7
5. Service 7
5.1 Warranty. 8
5.2 Technical description 8
5.3 Troubleshooting 8
5.4 Refrigerant Charging 9
5.5 Blower Replacement 10
5.6 Compressor/Capacitor Replacement 10
5.6A Checking Compressor Motor Circuits 10
5.6B Replacing a Burned Out Compressor 11
5.6C Replacing a Compressor- Non-Burn Out 11
5.7 Relay 11
5.8 Humidity Control 12
5.9 Defrost Thermistor 12
5.10 Condensate Pump 12
6. Wiring Diagram 13
7. Service Parts List 14
8. Accessories 14
Warranty 15

Serial No. _____

Purchase Date _____

Dealer's Name _____

Safety Precautions

Read the installation, operation and maintenance instructions carefully ***before*** installing and using this unit. Proper adherence to these instructions is essential to obtain maximum benefit from your HI-E *Dry* 195 dehumidifier.

READ AND SAVE THESE INSTRUCTIONS

The Hi-E Dry 195 conforms to unified standard UL 60335-2-40

- Never operate a unit with a damaged power cord. If the power cord is damaged it must be replaced by the manufacturer, its service agent, or similarly qualified person in order to avoid a hazard.
- The unit shall be installed in accordance with national wiring regulations.
- This appliance is not intended for use by persons (including children) with reduced physical, sensory or mental capabilities, or lack of experience and knowledge, unless they have been given supervision or instruction concerning use of the appliance by a person responsible for their safety. Children should be supervised to ensure that they do not play with the appliance.

1. Specifications

Part Number	4036710
Power	115 VAC 13.1 amps
Kilowatts	1.5 (80° 60%)
Blower	610 CFM
Capacity (24 hrs.)	195 pints (80°, 60%)
Temp. Range	40°F–110°F
Warranty	5 Year Limited

Dimensions

	Unit	Shipping
Width	20”	26”
Height	42”	47”
Depth	19”	24”
Weight	130 Lb	145 Lb

Minimum Performance at Set Conditions

Intake Air	70° 60%	80° 60%
Water removal/day	167 Lbs	201 Lbs
Pints/KWH	4.9	5.4

2. Installation

2.1 Location

The HI-E *Dry* 195 can be installed in a variety of locations to meet the owner’s needs as listed below. In all cases keep the following cautions in mind:

- It is designed to be installed **INDOORS ONLY.**
- If used near a pool or spa, be certain there is **NO** chance the unit could roll into the water or be splashed and that it is plugged into a **GROUND FAULT INTERRUPTER.**
- **DO NOT** use the HI-E *Dry* 195 as a bench or table.
- Avoid discharging the air directly at people, especially in pool areas.

2.1A In Humid Area, No Ducting

The simplest installation is to place the HI-E *Dry* 195 in the humid area with no ducting. The air inlet on top & outlet on the side must be at least 1' from walls and other obstructions to air flow.

2.1B In Humid Area, Duct inlet and/or Outlet

If the humid area is very large or has high ceilings, dehumidification can be improved by adding an inlet and/or outlet duct to circulate and destratify stagnant areas. For a large area, add inlet or outlet ducting to create flow across the area's greatest length.

For areas with ceilings higher than 12', use an inlet duct to draw warm, moist air from near the ceiling. See section 2.4 for attaching duct collars & ducting.

2.1C In Remote Area, Duct Outlet Only

This works well if there is an adequate air flow path between the two rooms; e.g., high door undercut, louvered door or wall grill. There are several potential disadvantages to using this method. First, humid air is drawn into the room where the HI-E *Dry* 195 is located. Second, to accurately sense humidity, the blower in the HI-E *Dry* 195 may need to run continuously to draw air from the humid room into the HI-E *Dry* 195 room. Third, a slight negative pressure is created in the room with the HI-E *Dry* 195 which could back draft open combustion devices located there. If such devices are present, call the factory for specific instructions before using this installation method or consider the option below.

2.1D In Remote Area, Duct Inlet Only

When the HI-E *Dry* 195 is located in a room separate from the main area to be dehumidified, it may be desirable to dehumidify and/or slightly pressurize that room. Pressurization assures that open combustion devices do not back draft as would be the case if the room was sufficiently de-pressurized. This can be accomplished by installing a duct from the humid room to the HI-E *Dry* 195 inlet and by allowing the HI-E *Dry* 195 to discharge the dehumidified air into the room in which it's located. An adequate air flow path must exist between the two rooms for this method to work well.

2.2 Electrical Requirements

The HI-E *Dry* 195 plugs into a common grounded outlet on a 20 Amp circuit. It draws between 10 and 14 Amps under normal operating conditions. If used in a wet area (pool, spa room, or basement prone to flooding), a ground fault interrupter protected circuit is required.

If an extension cord is required, it must have a minimum of 14 gauge conductors if less than 25 feet long and 12 gauge if greater than 25 feet.

2.3 Condensate Removal

The HI-E Dry 195 is equipped with an internal condensate pump to remove the water that is condensed during dehumidification. This allows the condensate to be pumped 30' with the attached hose. If the condensate must be pumped more than 20 feet above the unit, a second pump must be added to relay the condensate. The condensate pump is mounted inside the HI-E Dry 195 as a permanent, integral part of the unit. It includes a safety switch feature that prevents flooding by turning off the HI-E Dry 195 if the pump fails.

2.4 Ducting

2.4A Optional Ducting

A ducting kit consisting of one 12" Inlet duct collar, one 10" Outlet duct collar and one block off plate is available from the factory that will allow ducting to be attached to the inlet and outlet of the HI-E Dry 195. Attach the inlet collar to the top of the unit.

2.4B Ducting for Dehumidification

Ducting the HI-E Dry 195 as mentioned in sections 2.1B-2.1C requires consideration of the following points:

Duct Sizing: For total duct lengths up to 25', use a minimum 12" diameter round or equivalent rectangular for the intake and 10" diameter round or equivalent rectangular for the outlet. Grills or diffusers on the duct ends must not excessively restrict airflow.

Isolated Areas: Effective dehumidification may require that ducting be branched to isolated, stagnant areas. Use 8" diameter branch ducting to each of two or three areas; use 6" to each of four or five areas; use 4" to each of six or more areas.

2.4C Ducting for Fresh Air

Fresh air can be brought into the structure continuously by connecting a duct from outside to the HI-E *Dry* 195 inlet and by turning on the fan ON mode. Advantages of this form of ventilation include:

1. Outside air is filtered before entering the building.
2. Outside air will be dehumidified before entering if the HI-E *Dry* 195 is running.
3. Drawing air from outside and blowing inside aids in pressurizing the structure. This helps prevent unfiltered and undehumidified air from entering elsewhere. It also reduces the potential for carcinogenic radon gas to enter.
4. The need for an alternate ventilation device may be eliminated.

An insulated 4" diameter duct is generally sufficient to provide up to 70 CFM of outside air. A 6" duct with an adjustable damper is recommended for higher flows. Large quantities of outside air will impact HI-E Dry 195 performance positively or negatively, depending upon the difference between inside and outside air conditions. Consult the factory by calling 1-800-533-7533 for recommendations regarding the use of higher flows with your specific application.

The outside air duct should be connected into the main inlet duct close to the unit. If no other inlet duct is used, it may be necessary to obstruct the inlet of the HI-E Dry 195 to ensure adequate ventilation.

3. Operation

Green: Dehumidifying

Breathing Green: Air Circulating or Powering Down

Breathing Blue: Defrost

Red: Error

Pinging Green: Fan auto and setpoint reached

3.1 Humidity Control Adjustment

The dehumidifier will run continuously until the relative humidity (RH) is reduced to the humidity control setting. Setting the humidity control to lower RH levels will NOT increase the unit's dehumidification rate, it will simply run longer to reduce the area's RH to the setting. The HI-E *Dry* 195 unit (and refrigerant based dehumidifiers in general) will reduce a warm space's RH to a lower level than that of a cool space. It is therefore pointless to set the humidity control to excessively low levels in cool rooms. Doing so will result in long periods of ineffective dehumidifier run time.

A quality humidity meter is recommended to accurately monitor humidity levels. For a quote on a quality humidity meter, call the factory.

3.2 Fan ON mode

Turning the fan mode ON will cause the unit's internal blower to run continuously, whether the unit is dehumidifying or not. This function is desirable if the unit is used for air circulation or fresh air ventilation.

3.3 Purge Water

The condensate pump will collect water before sending it through the condensate hose. To purge water from holding tank, Hold → for 3 seconds within purge menu.

3.4 Defrost Control

When the HI-E *Dry* 195 is used in a cool area, frost will form on the cooling coil as it dehumidifies. When enough frost forms, the defrost Thermistor will initiate the timed defrost cycle. The cycle periodically turns off the compressor while allowing the blower to run. The air that the blower draws through the cooling coil melts the frost.

The defrost cycle is automatic and designed for optimum performance above 40°F.

3.5 Power Down

Navigate to Power Down menu ad press power button to turn off unit. See section 3.3 to purge condensate pump prior to shutdown.

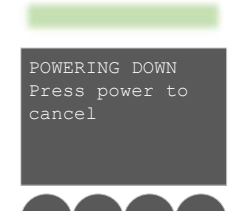

4.Maintenance

4.1 Air Filter

The HI-E Dry 195 is equipped with a 2" thick, MERV 11 pleated fabric air filter that must be checked regularly. Operating the unit with a dirty filter will reduce the dehumidifier's capacity and efficiency and may cause the compressor to cycle off and on unnecessarily on the defrost control.

Replacement filters can be ordered from the factory or purchased locally if available. DO NOT operate the unit without the filter or with a less effective filter as the heat exchange coils inside the unit could become clogged and require disassembly to clean.

5. Service

CAUTION: Servicing the HI-E *Dry* 195 with its high-pressure refrigerant system and high voltage circuitry presents a health hazard which could result in death, serious bodily injury, and/or property damage. Only qualified service people should service this unit.

Navigate to diagnostic menu and hold → to view alerts

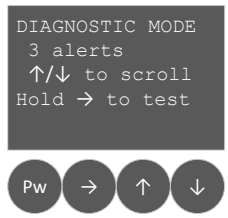

5.1 Warranty

A warranty certificate has been enclosed with this unit. Read it before any repair is initiated. If a warranty repair is required, call the factory first at 1-800-533-7533 for warranty claim authorization and technical assistance.

5.2 Technical Description

Refer to Figure 3. The HI-E *Dry* 195 uses a refrigeration system similar to an air conditioner's to remove heat and moisture from incoming air, and add heat to the air that is discharged.

Hot, high-pressure refrigerant gas is routed from the compressor to the condenser coil. The refrigerant is cooled and condensed by giving up its heat to the air that is about to be discharged from the unit. The refrigerant liquid then passes through two capillary tubes, which cause the refrigerant pressure and temperature to drop. It next enters the evaporator coil where it absorbs heat from the incoming air and evaporates.

The evaporator operates in a flooded condition, which means that it should always be full of liquid refrigerant during normal operation. A flooded evaporator should maintain constant pressure and temperature across the entire coil, from inlet to outlet.

The mixture of gas and liquid refrigerant enter the accumulator after leaving the evaporator coil. The accumulator prevents any liquid refrigerant from reaching the compressor. The compressor evacuates the cool refrigerant gas from the accumulator and compresses it to a high pressure and temperature to repeat the process.

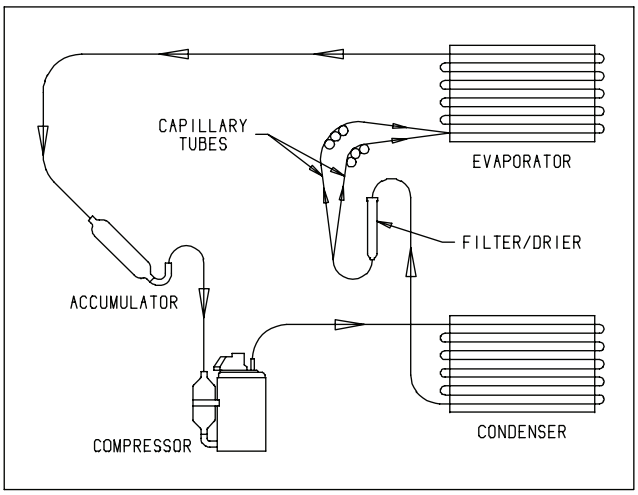

Figure 3: Refrigeration system of HI-E *Dry* 195

5.3 Troubleshooting

No dehumidification, neither blower nor compressor run.

1. Unit unplugged or no power to outlet.
2. Humidity control set too high or defective (Sec. 3.1 & 5.9)
3. Loose connection in internal wiring.

Some dehumidification, blower runs continuously but compressor only runs sporadically.

1. Unit is in defrost cycle (Sec. 3.3 & 5.10).
2. Loose connection in compressor circuit.
3. Defective compressor overload (Sec. 5.6).
4. Defective compressor (Sec. 5.6).
5. Defective relay (Sec. 5.7).
6. Defrost thermostat defective or loose (Sec. 3.3 & 5.9).

No dehumidification. Blower runs but compressor does not run.

1. Bad connection in compressor circuit.
2. Defective compressor capacitor (Sec. 5.6).
3. Defective compressor overload (Sec. 5.6).
4. Defective compressor (Sec. 5.6).
5. Defective relay or Power Board/Control Board (Sec. 5.7).
6. Bad connection in pump circuit.

Blower does not run. Compressor runs briefly but cycles on & off.

1. Loose connection in blower circuit (Fig. 4).
2. Obstruction prevents impeller rotation.
3. Defective blower (Sec. 5.5).

Unit removes some water but not as much as expected.

1. Air temperature and/or humidity have dropped.
2. Humidity meter and/or thermometer used are out of calibration.
3. Unit has entered defrost cycle (Sec. 3.3 & 5.9).
4. Air filter dirty (Sec. 4.1).
5. Defective defrost Thermistor (Sec. 5.9).
6. Low refrigerant charge (Sec. 5.4).
7. Air leak such as loose cover.
8. Defective compressor (Sec. 5.6).
9. Restrictive ducting (Sec. 2.4).

Pump does not pump water.

1. Hose kinked or plugged.
2. Pump check valve plugged (Sec. 5.10).
3. Bad connection in pump circuit.
4. Hose disconnected internally.

Evaporator coil frosted continuously, low dehumidifying capacity.

1. Low refrigerant charge (Sec. 5.4).
2. Dirty air filters or airflow restricted. (Sec. 4.1).
3. Defrost thermistor defective (Sec. 3.3 & 5.9).

5.4 Refrigerant Charging

If the refrigerant charge is lost due to service or a leak, a new charge must be accurately weighed in. If any of the old charge is left in the system, it must be removed before weighing in the new charge. Refer to the unit nameplate for the correct charge weight and refrigerant type. Add the refrigerant through the low side service port.

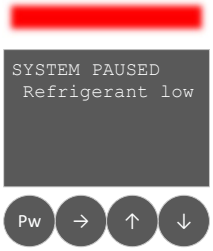

5.5 Blower Replacement

The centrifugal blower has a PSC motor and internal thermal overload protection. If defective, the complete assembly must be replaced.

1. Unplug the power cord.
2. Remove the cabinet front.
3. If an outlet duct is connected to the unit, remove it.
4. Disconnect the blower leads.
5. Remove the electrical box.
6. Remove impeller bracket and impeller
7. Reassembling with the new blower is the above procedure reversed.

5.6 Compressor/Capacitor Replacement

This compressor is equipped with a two terminal external overload, run capacitor, but no start capacitor or relay.

CAUTION-ELECTRICAL SHOCK HAZARD: Electrical power must be present to perform some tests; these tests should be performed by a qualified service person.

5.6A Checking Compressor Motor Circuits

Perform the following tests if the blower runs but the compressor does not with the humidity control ON.

1. Turn the humidity control OFF and unplug the unit, remove the cabinet front.
2. Plug in the unit and turn the humidity control ON. Use a voltmeter to check for 110 to 120 volts between (a) the relay terminal that the black wire from the compressor connects to and (b) the capacitor terminal with the (2) white wires, (1) red wire & (1) brown wire connected. If voltage is present, go to step 3. If no voltage, the relay or the condensate pump safety switch is open or there is a loose connection in the compressor circuit. Test each component for continuity; see the appropriate section if a defect is suspected
3. Turn the humidity control OFF and unplug the unit, then disconnect the red and yellow wires from compressor terminals R & S. Using an ohmmeter check continuity between the points listed below.
4. Compressor terminals C and S: No continuity indicates an open start winding; the compressor must be replaced.
5. Compressor terminals C and R: No continuity indicates an open run winding; the compressor must be replaced.
6. Compressor terminal C and overload terminal 1: No continuity indicates a defective overload lead.
7. Overload terminals 1 and 3: If there is no continuity, the overload may be tripped; wait 10 minutes and try again. If there is still no continuity, it is defective and must be replaced.
8. Compressor terminal C and compressor case: Continuity indicates a grounded motor; the compressor must be replaced.
9. Disconnect the wires from the capacitor. Set the ohmmeter to the Rx1 scale; the capacitor is shorted and must be replaced if continuity exists across its terminals. If there is no needle movement with the meter set on the Rx100000 scale, the capacitor is open and must be replaced.
10. Reconnect the wires to the compressor and capacitor; plug in and turn on the unit. If the compressor fails to start, replace the run capacitor.
11. If the unit still does not start, adding a hard-start kit will provide greater starting torque. If this does not work, the compressor has an internal mechanical defect and must be replaced.

5.6B Replacing a Burned Out Compressor

The refrigerant and oil mixture in a compressor is chemically very stable under normal operating conditions. However, when an electrical short occurs in the compressor motor, the resulting high temperature arc causes a portion of the refrigerant oil mixture to break down into carbonaceous sludge, a very corrosive acid, and water. These contaminants must be carefully removed otherwise even small residues will attack replacement compressor motors and cause failures.

The following procedure is effective only if the system is monitored after replacing the compressor to insure that the clean up was complete.

1. This procedure assumes that the previously listed compressor motor circuit tests revealed a shorted or open winding. If so, cautiously smell the refrigerant from the compressor service port for the acid odor of a burn out.

   WARNING: The gas could be toxic and highly acidic. If no acid odor is present, skip down to the section on changing a non-burn out compressor.

2. Remove and properly dispose of the system charge. DO NOT vent the refrigerant or allow it to contact your eyes or skin.
3. Remove the burned out compressor. Use rubber gloves if there is any possibility of coming in contact with the oil or sludge.
4. To facilitate subsequent steps, determine the type of burn out that occurred. If the discharge line shows no evidence of sludge and the suction line is also clean or perhaps has some light carbon deposits, the burn out occurred while the compressor was not rotating. Contaminants are therefore largely confined to the compressor housing. A single installation of liquid and suction line filter/driers will probably clean up the system.

   If sludge is evident in the discharge line, it will likely be found in the suction line; this indicates the compressor burned out will running. Sludge and acid have been pumped throughout the system. Several changes of the liquid and suction filter/driers will probably be necessary to cleanse the system.
5. Correct the system fault that caused the burn out. Consult the factory for advice.
6. Install the replacement compressor with a new capacitor and an oversized liquid line filter.

   In a running burn out, install an oversized suction line filter/drier between the accumulator and compressor. Thoroughly flush the accumulator with refrigerant to remove all trapped sludge and to prevent the oil hole from becoming plugged. A standing burn out does not require a suction line filter/drier.
7. Evacuate the system with a good vacuum pump and accurate vacuum gauge. Leave the pump on the system for at least an hour.
8. Operate the system for a short period of time, monitoring the suction pressure to determine that the suction filter is not becoming plugged. Replace the suction filter/drier if pressure drop occurs. If a severe running burn out has occurred, several filter/driers may have to be replaced to remove all of the acid and moisture.

NOTE: NEVER use the compressor to evacuate the system or any part of it.

5.6C Replacing a Compressor- Non-Burn Out

Remove the refrigerant from the system. Replace the compressor and liquid line filter/drier. Charge the system to 50 PSIG and check for leaks. Remove the charge and weigh in the refrigerant quantity listed on the nameplate. Operate the system to verify performance.

5.7 Relay

The contacts of the single pole, single throw relay complete the power circuit to the compressor. The contacts are closed when power is provided to the relay coil via the control circuit. The control circuit includes the humidity control, low pressure control, defrost thermostat and timer.

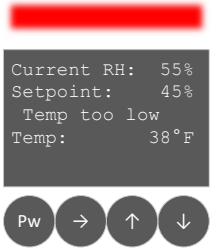

5.8 Humidity Control

The humidity control is a digital setting that controls the dehumidifier when the relative humidity of the air in which it is located rises to the dial set point. It opens when the RH drops 3% below the set point.

5.9 Defrost Thermistor

The defrost thermistor is attached to the refrigerant suction tube between the accumulator and compressor. If the low side refrigerant temperature drops due to excessive frost formation on the evaporator coil, the thermostat opens. The compressor is then cycled off and on by the defrost timer. The blower will continue to run, causing air to flow through the evaporator coil and melt the ice when the compressor is off. When the air temperature and/or humidity increase, the evaporator temperature will rise and the thermostat will close to end the defrost cycle.

5.10 Condensate Pump

Condensate is automatically pumped when the water level in the pump's reservoir rises to close the float switch.

If the pump is unable to empty its reservoir due to a pump failure or blocked condensate hose, a pump safety float switch is triggered before the reservoir overflows. The switch turns off the compressor via its relay.

To replace the condensate pump:

1. Unplug the unit & remove the front cover.
2. Disconnect the 2 hoses from the pump.
3. Disconnect pump lead wires to the electrical box.
4. Remove the wingnut from the pump bracket.
5. Install new pump and bracket.
6. Connect the new pump wiring.
7. Connect the hoses to the new pump. Carefully route the hoses so they do not contact the copper refrigerant lines or the compressor shell.

6. Wiring Diagram

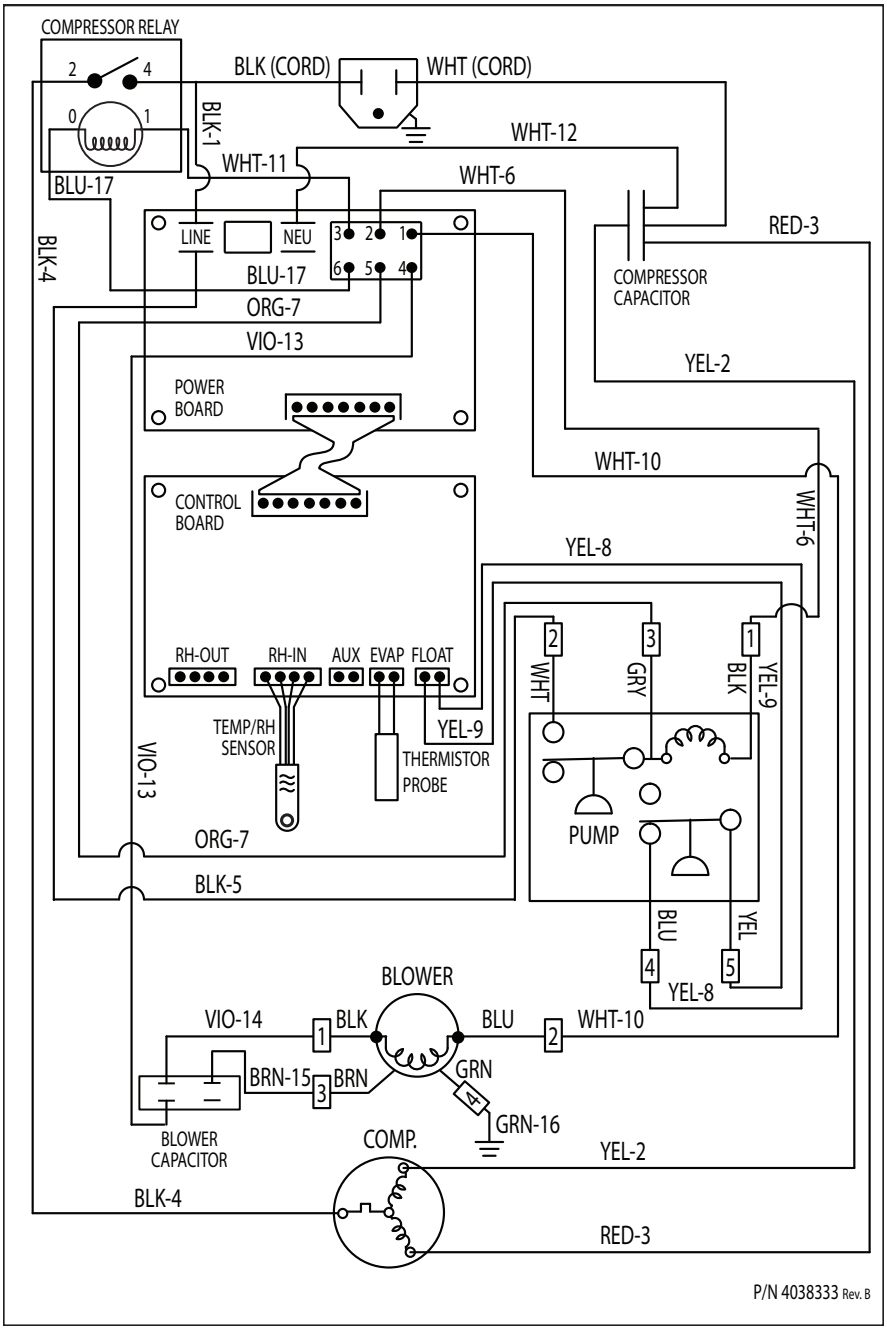

Figure 4: Electrical Schematic of HI-E *Dry* 195

7. Service Parts: HI-E *Dry* 195 Dehumidifier

ITEM	PART NO.	QTY.	DESCRIPTION
1	403235-08	1	Blower with Capacitor
2	4033032-06	1	Capacitor, Run, 50MFD, 370v
3	4036164-13	2	Capillary Tubes
4	4038326	2	Caster, 2", w/brake
5	4038327	2	Caster, 2"
6	4028566	1	Coil, Condenser
7	4034474-05	1	Coil, Evaporator E-Coat
8	4030131	1	Compressor
9	4030121	1	Compressor Overload
10	4034474-01	1	Condensate Pump
11	4036954	1	Wire Harness, Low Voltage
12	4038332	1	Wire Harness, High Voltage
13	4036524	1	Cord
14	4034716-04	1	Probe, Thermistor
15	4021475	2	Filter, Air (1.75" X 15.5" X 19.5")
16	4029510	1	Filter/Drier
17	4024916	1	Hose, Vinyl, .25 x 33 ft.
18	4029894	1	Hose, Vinyl, .56 x 24 ft.
19	1970010	1	Relay, SPDT (Omron G7L-1A-TUB-CB-AC100/120)
20	4020988	1	Service Valve Assembly w/ Core & Cap
	4038333	1	Wiring Diagram (not shown)

8. ACCESSORIES: HI-E Dry 195 Dehumidifier

PART NO.	DESCRIPTION
4039132	Duct Collar Kit
4021475	Filter
4039075	Muffler Kit

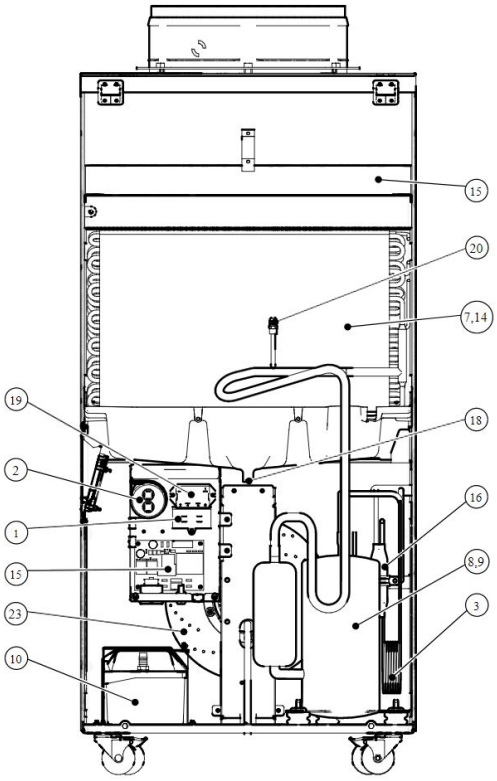

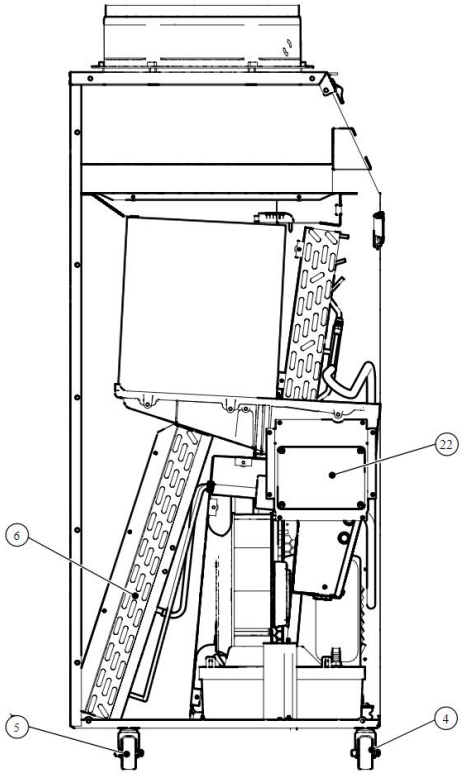

HI-E *Dry* 195 Dehumidifier Limited Warranty

Warrantor:

Therma-Stor LLC
4201 Lien Rd
Madison, WI 53704
Telephone: 1-800-533-7533

Who Is Covered: This warranty extends only to the original end-user of the HI-E *Dry* 195 dehumidifier, and may not be assigned or transferred.

Year One: Therma-Stor warrants that, for one (1) year the HI-E *Dry* 195 dehumidifier will operate free from any defects in materials and workmanship, or Therma-Stor will, at its option, repair or replace the defective part(s), free of any charge.

Year(s) Two Through Five: Therma-Stor further warrants that for a period of five (5) years, the condenser, evaporator, and compressor of the HI-E *Dry* 195 dehumidifier will operate free of any defects in material or workmanship, or Therma-Stor, at its option, will repair or replace the defective part(s), provided that all labor and transportation charges for the part(s) shall be borne by the end-user.

End-User Responsibilities: Warranty service must be performed by a Servicer authorized by Therma-Stor. If the end-user is unable to locate or obtain warranty service from an authorized Servicer, he should call Therma-Stor at the above number and ask for the Therma-Stor Service Department, which will then arrange for covered warranty service. Warranty service will be performed during normal working hours.

The end-user must present proof of purchase (lease) upon request, by use of the warranty card or other reasonable and reliable means. The end-user is responsible for normal care. This warranty does not cover any defect, malfunction, etc. resulting from misuse, abuse, lack of normal care, corrosion, freezing, tampering, modification, unauthorized or improper repair or installation, accident, acts of nature or any other cause beyond Therma-Stor's reasonable control.

Limitation and Exclusions: If any HI-E *Dry* 195 Dehumidifier part is repaired or replaced, the new part shall be warranted for only the remainder of the original warranty period applicable thereto (but all warranty periods will be extended by the period of time, if any, that the HI-E *Dry* 195 Dehumidifier is out of service while awaiting covered warranty service).

UPON THE EXPIRATION OF THE WRITTEN WARRANTY APPLICABLE TO THE HI-E *Dry* 195 DEHUMIDIFIER OR ANY PART THEREOF, ALL OTHER WARRANTIES IMPLIED BY LAW, INCLUDING MERCHANTABILITY AND FITNESS FOR A PARTICULAR PURPOSE, SHALL ALSO EXPIRE. ALL WARRANTIES MADE BY THERMA-STOR ARE SET FORTH HEREIN, AND NO CLAIM MAY BE MADE AGAINST THERMA-STOR BASED ON ANY ORAL WARRANTY. IN NO EVENT SHALL THERMA-STOR, IN CONNECTION WITH THE SALE, INSTALLATION, USE, REPAIR OR REPLACEMENT OF ANY HI-E *Dry* 195 DEHUMIDIFIER OR PART THEREOF BE LIABLE UNDER ANY LEGAL THEORY FOR ANY SPECIAL, INDIRECT OR CONSEQUENTIAL DAMAGES INCLUDING WITHOUT LIMITATION WATER DAMAGE (THE END-USER SHOULD TAKE PRECAUTIONS AGAINST SAME), LOST PROFITS, DELAY, OR LOSS OF USE OR DAMAGE TO ANY REAL OR PERSONAL PROPERTY.

Some states do not allow limitations on how long an implied warranty lasts, and some do not allow the exclusion or limitation of incidental or consequential damages, so one or both of these limitation may not apply to you.

Legal Rights: This warranty gives you specific legal rights, and you may also have other rights which vary from state to state.