SAVE THESE INSTRUCTIONS

INSTALLATION AND MAINTENANCE

king
Smart Heating Solutions

LPW-ECO2S & LPW-Series 2
Surface Mount Frame

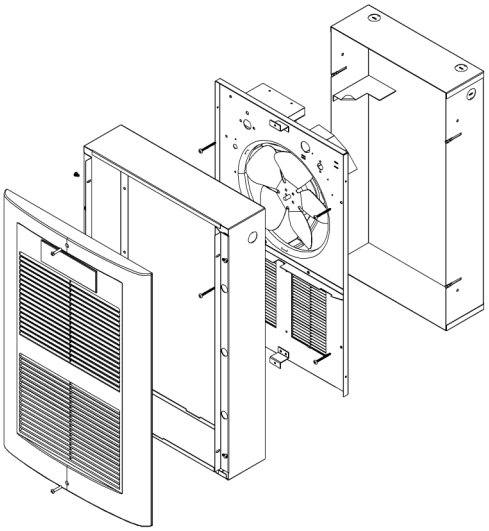

DANGER

ELECTRIC SHOCK OR FIRE HAZARD

READ ALL WIRE SIZING, VOLTAGE REQUIREMENTS AND SAFETY DATA TO AVOID PROPERTY DAMAGE AND PERSONAL INJURY

MADE IN USA

WARNING

READ CAREFULLY - *Use the heater only as described in this manual. Any other use is not recommended and could result in fire, electric shock, and personal injury. Following these instructions will prevent difficulties that might occur during the installation and use of the heater. Please study the instructions first, as they may save considerable time and trouble during use addition to providing important safety information. Make sure to save these instructions for future use.*

WARNING 1. Read all instructions before wiring or using this heater.

WARNING 2. This heater is hot when in use. To avoid burns, do not let bare skin touch hot surfaces. Keep combustible materials, such as furniture, pillows, bedding, papers, clothes, boxes, etc., and curtains must be at least 3 feet away from the front and sides of heater.

WARNING 3. Extreme caution is necessary when any heater is used by or near children or invalids and whenever the heater is left operating and unattended.

WARNING 4. Do not operate any heater after it malfunctions. Disconnect power at service panel and have heater inspected by a qualified electrician for repair before reusing.

WARNING 5. Do not use outdoors.

WARNING 6. To disconnect heater, turn controls to OFF, and turn OFF power from main service panel.

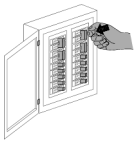

Figure 1-2

WARNING 7. Do not insert or allow foreign objects to enter any ventilation or exhaust opening as this may cause an electric shock, fire, or damage to the heater.

WARNING 8. To prevent a possible of fire, do not block air intakes or exhaust in any manner.

WARNING 9. A heater has hot and arching or sparking parts inside. Do not use it in areas where gasoline, paint, or any other flammable vapors or liquids are stored.

WARNING 10. Use this heater only as described in the manual. Any other use is not recommended by the manufacturer and may cause fire, electric shock, explosion or injury to people and or property.

WARNING 11. This heater includes a Smart limit protection that shuts down heater in the event of excessive over heating.

WARNING 12. Heater is not intended for use in bathrooms, laundry areas or similar indoor locations. Never locate heater where it may fall into a bathtub or other water container.

KING ELECTRIC MFG CO · 9131 10TH AVENUE SOUTH · SEATTLE, WA 98108 · PH:206 762 0400 · FAX: 206 763 7738 · www.king-electric.com

LPW SURFACE FRAME INSTALLATION

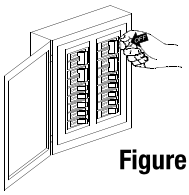

CAUTION!
Turn OFF all electrical power to install heater

Figure 2-1

DANGER

ELECTRIC SHOCK OR FIRE HAZARD

READ ALL WIRE SIZING, VOLTAGE REQUIREMENTS AND SAFETY DATA TO AVOID PROPERTY DAMAGE AND PERSONAL INJURY

Figure 2-2

Rating Label Location

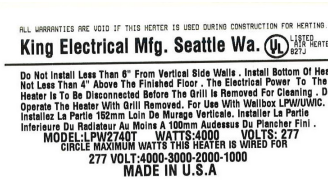

Figure 2-3

INSTALLATION LOCATION AND CLEARANCES

Selecting a location for your heater:

Do Not install less than 6 inches from vertical side walls or open edge of door. This heater must have an unrestricted airflow. Do Not select a location where it is likely to be blocked by furniture, curtains, etc. Be sure the location selected allows sufficient space for the heater as shown below by Table 1. Do Not locate this heater in an area where combustible vapors, gases, flammable liquids, or excessive lint, dust or moisture is present.

Table 1

Minimum Clearances for heater:			
Front	TOP	BOTTOM	SIDES
36 in	12 in	4 in	6 in
0.9 m	30.5 cm	10.2 cm	15.2 cm

Zero clearance to insulation.

The wire and breaker sizing chart will give a general rule of installation size. Consult an electrician if you are not knowledgeable about wiring codes.

Wire and Breaker Sizing:
WIRING: Branch Circuit Connection

Table 2

Total Amps	Minimum AWG. Wire Size (Copper	Circuit Breaker or Fuse Size
0 thru 12	#14	15 amp
12.1 thru 16	#12	20 amp
16.1 thru 24	#10	30 amp

Product Dimensions

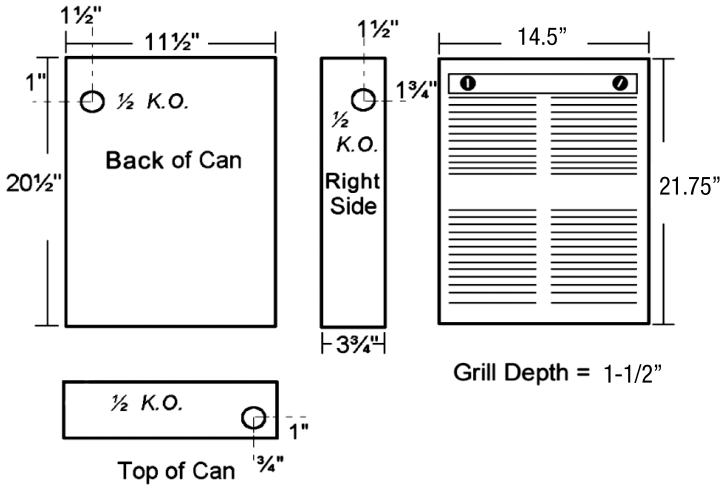

LPW SURFACE FRAME INSTALLATION

Step 1: SECURE WALL BOX ONTO WALL SURFACE

Drill 4 pilot holes (at 4 corners) in back of the wall box and secure to the wall with appropriate fasteners (not provided). It is recommended to secure to either a wall stud directly or to use appropriate anchors if wall is made of cement or other material.

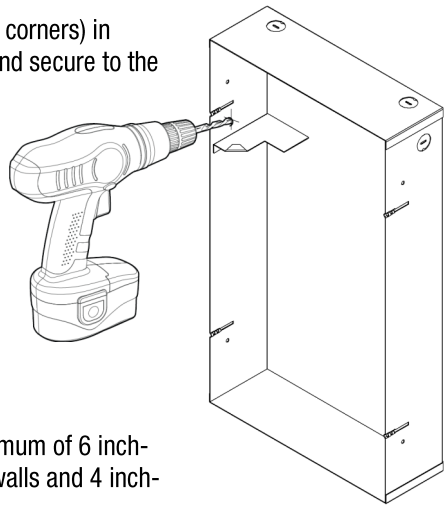

Install wall box a minimum of 6 inches from vertical side walls and 4 inches above floor.

Step 2: INSTALL HEATER INTERIOR ONTO WALL BOX

1. 1/2" knockouts for conduit size (7/8") are provided in the back & side of heater for power to enter. Provide proper strain relief connectors (not included) for wire entering wall box.
2. Make final wattage selections. See your heater's installation manual.
3. Connect supply wires, per your heaters' installation manual. Attach ground feed wire to the green ground wire with wire nuts.
4. Install heater interior onto wall box with screws (4).

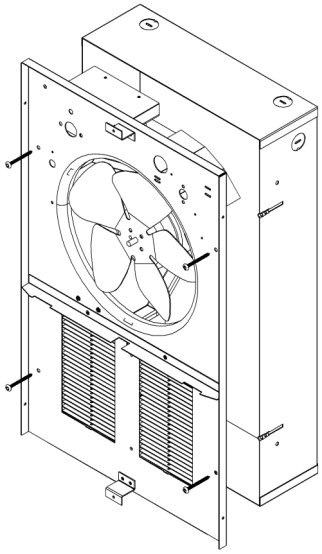

Step 3: SECURE SURFACE FRAME TO WALL BOX

Install surface frame over wall box and secure to the heater interior assembly with 4 screws (provided) on sides of the interior.

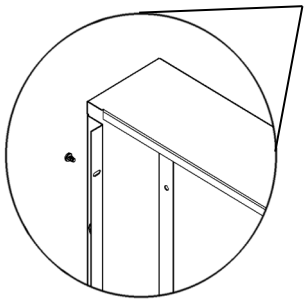

Screw detail

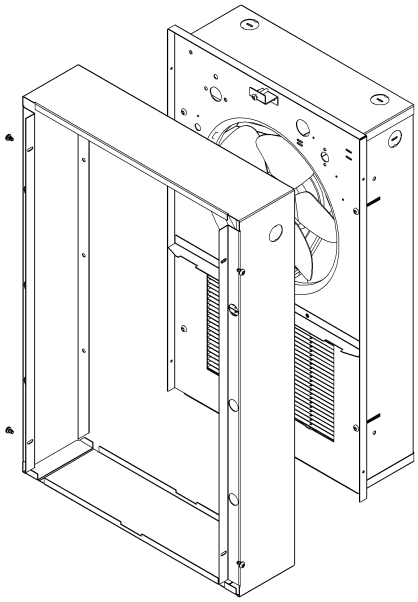

Step 4: INSTALL GRILL

Install heater grill onto the heater assembly with 2 grill screws (provided).

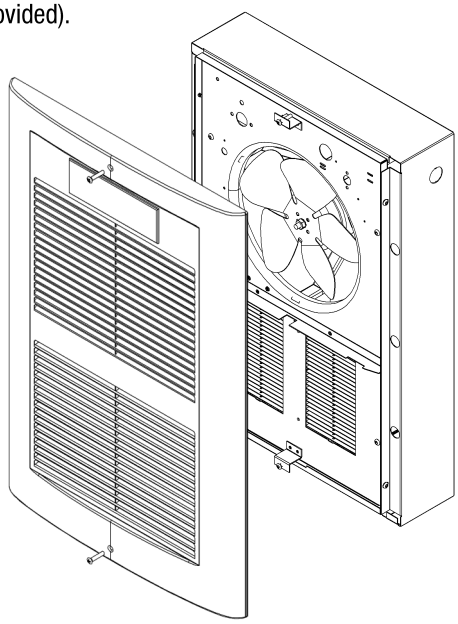

MAINTENANCE AND WARRANTY

Maintenance & Cleaning: Basic maintenance is listed below and should be performed annually. When necessary, any required servicing should be performed by qualified service personnel. Your heater will give you years of service and comfort with only minimum care. To assure efficient operation follow the simple instructions below.

WARNING: Turn the electrical power OFF at the electrical panel board (circuit breaker or fuse box) and lock or tag this panel board door to prevent someone from turning on power while you are working on this heater. Failure to do so could result in serious electrical shock, burns, or possible death.

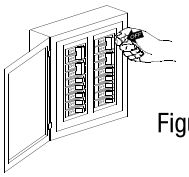

Figure 2

Before cleaning this heater, the heating element of the heater must be cool.

1. Before removing grill, turn the electrical power OFF. See Figure 2. Circuit breakers are often not marked correctly and turning the wrong breaker off could mean electricity is flowing to the heater, even if the heater does not appear to be working. If you are uncomfortable working with electrical appliances, unable to follow these guidelines, or do not have the necessary equipment, consult a qualified electrician. Once you verify the power is off completely, proceed to the next step.
2. Remove screws and take off grille. Wash grille with hot soapy water and dry immediately
3. Using a hair dryer or vacuum on blow cycle, hold the fan in place to prevent it from turning and blow debris back through the element. Do not touch element. Vacuum lose debris without touching the elements.
4. Replace grille and secure with screws.
5. Turn thermostat to desired setting.
6. Turn power back ON at the electrical panel board.

WARRANTY INFORMATION

King Electrical Manufacturing Company will repair or replace, without charge to the original owner, any LPW Series heater found to be defective or malfunctioning within 5 years of installation. This warranty requires the owner or his agent install the equipment in accordance with the National Electrical Code, any other applicable heating or electrical codes, and the manufacturer's installation instructions. It further requires that reasonable and necessary maintenance be performed on the unit. Failure to properly maintain the unit will result in the warranty being voided. The company is not liable for abuse or misuse of product as may be finally determined by the company. The customer shall be responsible for all costs incurred in the removal or reinstallation of products, including labor costs and shipping costs incurred to return products to King Manufacturing. King Manufacturing will repair or replace, at our option, at no charge to the customer with return freight paid by King. King Manufacturing shall not be liable for consequential damages arising with respect to the product, whether based upon negligence, tort, strict liability or contract. No other written or oral warranty applies, nor any warranties by representatives dealers, employees of King, or any other person. All returns require a King Return Goods Authorization (RGA); Unauthorized returns will be refused. Do not return malfunctioning/defective products to store.