SAVE THESE INSTRUCTIONS

INSTALLATION AND MAINTENANCE

king

KBP Compact Unit Heaters

Figure 1

DANGER

ELECTRIC SHOCK OR FIRE HAZARD

READ ALL WIRE SIZING, VOLTAGE REQUIREMENTS AND SAFETY DATA TO AVOID PROPERTY DAMAGE AND PERSONAL INJURY

Do not install bottom of heater less than 6 ft above the floor 6 inches to side wall, 5 inches to back wall, and 2 inches to ceiling when clearance to ceiling is 2 inches. Do not point heater at ceiling.

KBP unit heaters are to be operated at voltage listed on the rating label. It is important that you verify the power supply voltage is the same as the nameplate voltage of the heater. Connecting the heater to an improper voltage or failure to follow the procedures as outlined in this manual can result in damage to the heater and void the warranty. This heater is provided with a factory installed thermostat. Disconnect all power from the heater at the main service panel before attempting to install or service this unit. All electrical wiring must conform to local electrical codes. Heater circuit must be properly protected.

WARNING

READ CAREFULLY *- Use the heater only as described in this manual. Any other use is not recommended and could result in fire, electric shock, and personal injury. Following these instructions will prevent difficulties that might occur during the installation and use of the heater. Please study the instructions first, as they may save considerable time and trouble during use addition to providing important safety information. Make sure to save these instructions for future use.*

Read all instructions before wiring or using this heater.

WARNING Heaters outlet grill is very hot when in use. To avoid burns, do not touch hot surfaces with bare skin. Keep combustible materials, including furniture, pillows, bedding, papers, clothes, curtains, and boxes at least 3 feet from the front of the heater and keep them away from the sides and rear.

WARNING Do not use outdoors.

WARNING Heater is not intended for use in bathrooms, laundry areas or similar indoor locations. Never locate heater where it may fall into a bathtub or other water container.

WARNING Do not insert or allow foreign objects to enter any inlet or outlet openings as this may cause an electric shock, fire, or damage to the heater.

WARNING To prevent a possible of fire, do not block air intakes or exhaust in any manner.

WARNING Heater has hot surfaces. Internal thermostat and limiting parts will arcing or create sparks inside. Do not use this heater in areas where gasoline, paint, or flammable liquids or gases are used or stored.

WARNING Use this heater only as described in this manual. Any other use is not recommended by the manufacturer and may cause fire, electric shock, explosion or injury to people and or property.

WARNING If heater shows signs of overheating immediately turn the circuit breaker off to the heater. Remove and inspect for any objects on or adjacent to the heater that may cause the high temperatures. Have a professional inspect the internals until the reason is clear why the heater is overheating. Do not reinstall until it has been professionally serviced.

WARNING Do not operate heater after it malfunctions. Disconnect heater at service panel and have heater inspected by a reputable electrician before reusing. To disconnect heater, turn controls to off position, and turn off power to heater circuit at main electrical panel or operate internal disconnect switch to off if provided.

WARNING Extreme caution is necessary when any heater is used by or near children or invalids and whenever the heater is left operating and unattended too.

SAFETY INFORMATION

DANGER

ELECTRIC SHOCK OR FIRE HAZARD

READ ALL WIRE SIZING, VOLTAGE REQUIREMENTS AND SAFETY DATA TO AVOID PROPERTY DAMAGE AND PERSONAL INJURY

Figure 1

Chart 2

Minimum Clearance From Combustibles	
Front	18 in.
Top	2 in.
Sides	6 in.
Rear	5 in.
Floor	6 ft.

Warning: Prior to operating, make sure the circuit breaker is of the configuration and capacity appropriate for the heater.

- Minimum installed distance from the heater to the adjoining wall or ceiling surfaces - 5 inches to back wall.
- When clearance to ceiling is 2 inches, Do Not Point Heater At Ceiling.
- Use extreme caution when used near children or people with disabilities
- Do not use outdoors.
- Not intended for use in bathrooms, laundry areas or other similar wet locations. Never locate heater where it may have contact with water.
- Do not use heater in wet or moist locations
- Don't place heater against cardboard or low-density fiberboard surfaces.
- Avoid using an extension cord because the extension cord may overheat and cause a risk of fire.
- Use only the electrical power (voltage and frequency) specified on the model plate of the heater.
- Keep all combustible materials away from this heater

WHAT'S IN THE BOX

Figure 2-1

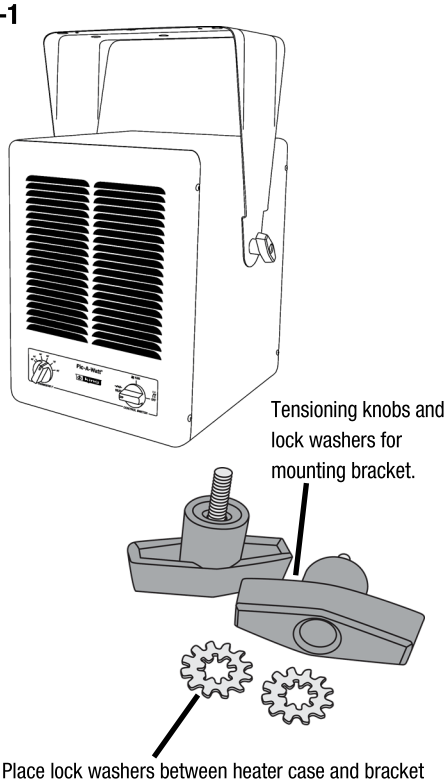

HEATER DIAGRAM

Figure 2-2

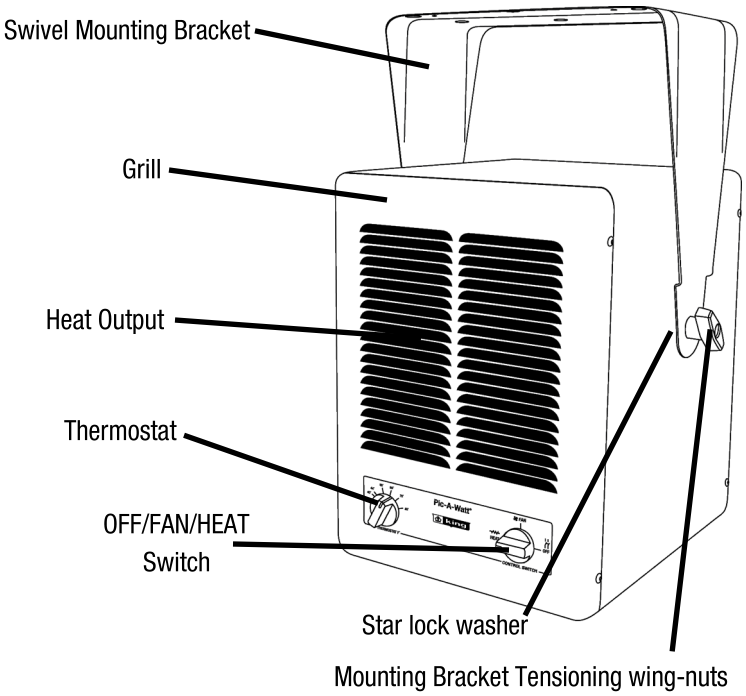

ASSEMBLY INSTRUCTIONS

DANGER

ELECTRIC SHOCK OR FIRE HAZARD

READ ALL WIRE SIZING, VOLTAGE REQUIREMENTS AND SAFETY DATA TO AVOID PROPERTY DAMAGE AND PERSONAL INJURY

KBP Garage/Shop Unit Heater

Chart 3

Minimum Clearance From Combustibles	
Front	18 in.
Top	2 in.
Sides	6 in.
Rear	5 in.
Floor	6 ft.

INSTALLATION INSTRUCTIONS

FOR WALL MOUNT APPLCATIONS

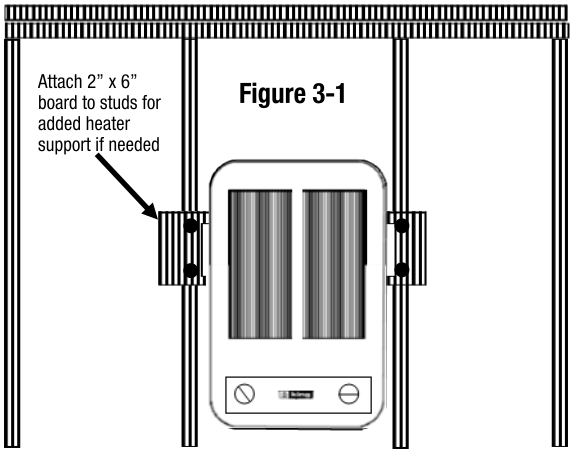

Figure 3-1

FOR CEILING MOUNT APPLCATIONS

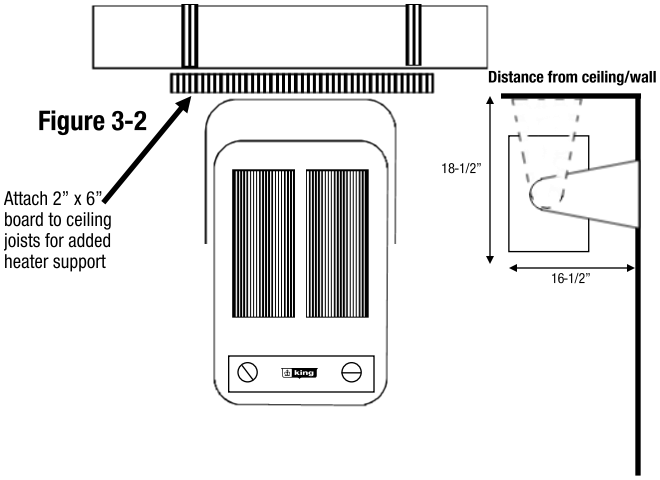

Figure 3-2

TOOLS NEEDED:

- Screwdriver (Phillips & Slotted)
- Wire Cutters
- Pliers
- Adjustable Wrench
- Electric Drill

Remove heater & all packaging materials from the box.

HARDWARE NEEDED:

- Adequate gauge & length of wire for your application
- Proper size fuses or breakers to handle amperage
- Proper wire connectors for your application
- Fasteners appropriate size to mount heater

Tip: Be sure to remove the hardware package from the Styrofoam packaging.

MOUNTING HEIGHT:

When the air flow of the heater is directed vertically or horizontally, the minimum mounting height is 6 feet in the USA and 8 feet in Canada. Mounting heights depend upon building utilization and heater KW capacity.

LOCATION OF HEATER:

The heater should be installed 6 feet above floor and according to minimum clearance chart (Figure 1) The direction of airflow should not be restricted by machinery, beams, etc., and the air flow should run with walls, rather than blowing directly at them. When more than one heater is used in an area, the heaters should be arranged so that the air discharge of each heater supports the air flow of the others to provide best circulation of warm air. (see figure 4).

Figure 3-3

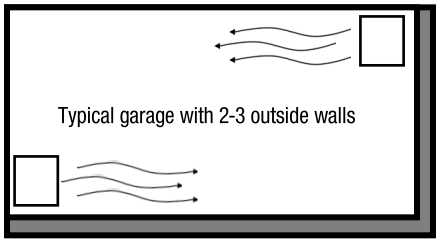

MOUNTING HEATER:

Wall stud and ceiling joists are typically wider than our mounting bracket which is 11 inches wide. The heater weighs 14 lbs. and should be mounted onto at least one stud to be properly supported.

Your fasteners penetrating a stud is critical to supporting the weight. A gypsum wall board fastener is not strong enough. But if your ideal location has no solid backing, you can fasten with large screw fasteners a 2" x 6" board to ceiling joists or wall studs. Attach with appropriate lag bolts with proper depth for the 14 lbs. Install wing nut fasteners into the outside of the bracket and star washer between the heater and bracket. Be certain adjustment knobs are tightened firmly to secure the heater to swivel bracket.

INSTALLATION INSTRUCTIONS

⚠ WARNING Before proceeding further with the installation of this heater, turn off the power and lock the supply line for the heater at the main service box.

WIRING HEATER:

1. Remove wiring compartment cover.
2. Remove one of the knock outs from the back of the unit. It is not necessary to remove the grill cover.
3. Size service wire to adequately handle amp load of the heater. Refer to the Circuit Sizing Table for proper wire size and circuit protection.
4. Connect supply wire to L1 & L2 as shown in the diagram below.
5. Secure power supply cable with cable clamp.
6. Connect ground wire to the green pig tail.
7. Adjust the heater to the desired position.

Note: Power must land at heater uninterrupted by switches or thermostat due to thermal fan delay

Chart 4

1 PHASE CIRCUIT SIZING TABLE					
Watts (Max)	BTUH	Volts	Amps 1 Phase	Wire Size	Circuit Protection
1440	4,910	120	12	#14/2	15A-1P
1920	6,547		16	#12/2	20A-1P
2850	1,927		24	#10/2	30A-1P
1900	6,484	208	9.1	#14/2	15A-2P
		240	7.9	#14/2	
2850	9,727	208	13.7	#12/2	20A-2P
		240	11.9	#14/2	15A-2P
3800	12,969	208	18.3	#10/2	30A-2P
		240	15.8	#12/2	20A-2P
4750	16,211	208	22.8	#10/2	30A-2P
		240	19.8		
5700	19,454	208	27.4	#8/2	40A-2P
		240	23.7	#10/2	30A-2P
1,000	3,413	277	4	#14/2	15A-1P
2,000	6,826		7	#14/2	15A-1P
3,000	10,239		11	#14/2	15A-1P
4,000	13,652		15	#12/2	20A-1P
2000	6,826	480	4.2	#14/2	15A-2P
3000	10,239		6.3	#14/2	15A-2P
4000	13,652		8.3	#14/2	15A-2P
5000	17,050		10.4	#14/2	15A-2P
6000	20,460		12.5	#14/2	15A-2P
3 PHASE CIRCUIT SIZING TABLE					
Watts (Max)	BTUH	Volts	Amps 3 Phase	Wire Size	Circuit Protection
2850	9,727	208	7.9	#14/3	15A-3P
		240	6.8		
5700	19,454	208	15.8	#12/3	20A-3P
		240	13.7		
3000	10,239	480	3.6	#14/3	15A-3P
6000	20,460		7.2	#14/3	15A-3P

Per the National Electrical Code heating circuits are considered a continuous load and therefore must be de-rated by 20%. For example a 20 amp heating circuit can not have more than 16 amps of connected load.

SAFETY INFORMATION

DANGER

ELECTRIC SHOCK OR FIRE HAZARD

READ ALL WIRE SIZING, VOLTAGE REQUIREMENTS AND SAFETY DATA TO AVOID PROPERTY DAMAGE AND PERSONAL INJURY

Chart 2

Minimum Clearance From Combustibles	
Front	18 in.
Top	2 in.
Sides	6 in.
Rear	5 in.
Floor	6 ft.

KBP1230 WIRING DIAGRAMS

Pic-A-Watt® Heating Element Exclusive king multi-tap ele-

Field Wattage Selection

1. Heater is wired at 2850 watts (Maximum Wattage)

A. Disconnect A to reduce total wattage by 712 watts
B. Disconnect B to reduce total wattage by 238 watts
C. Disconnect C to reduce total wattage by 712 watts
D. Disconnect D to reduce total wattage by 238 watts
E. Black Do Not Disconnect (Common)
F. Red Do Not Disconnect

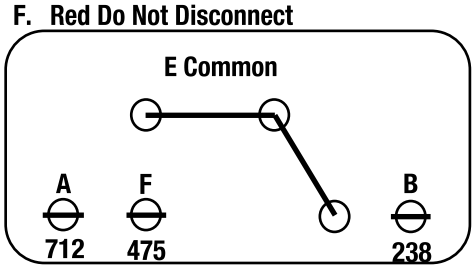

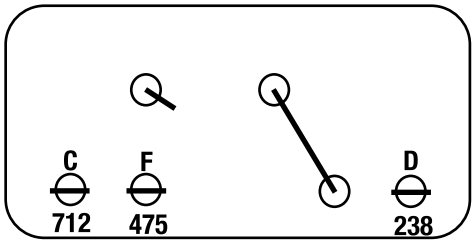

END VIEW OF ELEMENT

SHOWING QUICK CONNECT TERMINALS

975 • 1426 • 1900 • 2374 • 2850

WATTAGES AVAILABLE IN ONE UNIT

Wiring Diagram for KBP1230 120 Volt 2850

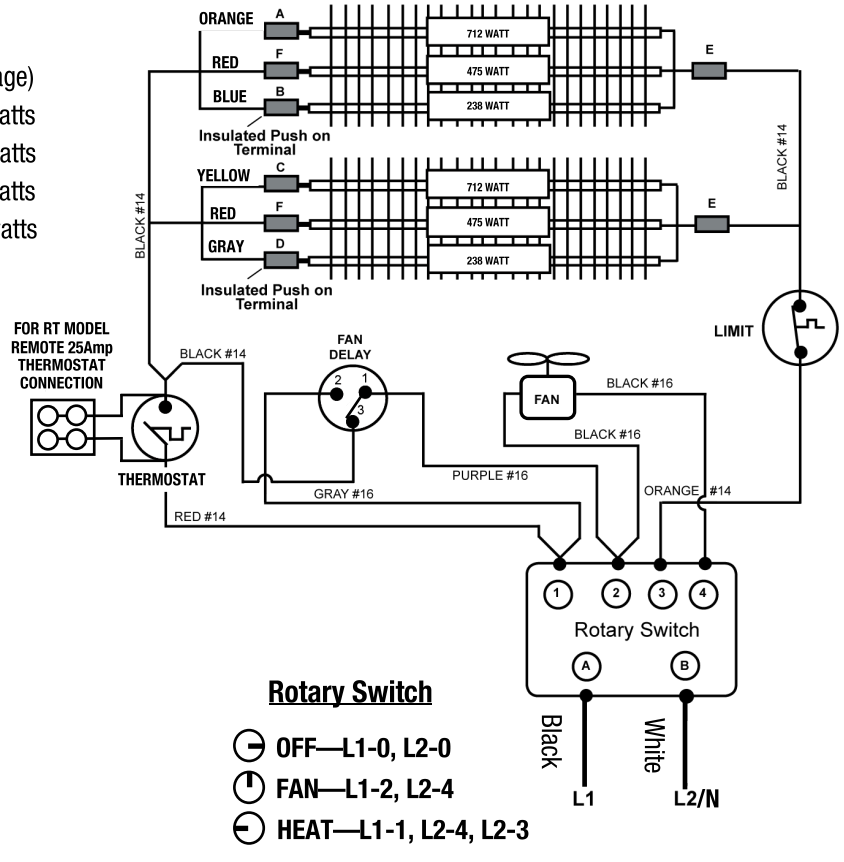

Rotary Switch

- OFF—L1-0, L2-0
- FAN—L1-2, L2-4
- HEAT—L1-1, L2-4, L2-3

Wiring Diagram# KBP1230 120 Volt 2850 Watt unit heater

SAFTEY INFORMATION

king

DANGER

ELECTRIC SHOCK OR FIRE HAZARD

READ ALL WIRE SIZING, VOLTAGE REQUIREMENTS AND SAFETY DATA TO AVOID PROPERTY DAMAGE AND PERSONAL INJURY

Chart 2

Minimum Clearance From Combustibles	
Front	18 in.
Top	2 in.
Sides	6 in.
Rear	5 in.
Floor	6 ft.

KBP2406 WIRING DIAGRAMS

Pic-A-Watt® Heating Element Exclusive king multi-tap element allows field adjustment to several wattages at time of installation.

Field Wattage Selection

1. Heater is wired at 5700 watts (Maximum Wattage)
2. 4750 Watts disconnect terminal A
3. 3800 Watts disconnect terminals A,D
4. 2850 Watts disconnect terminals A,B,D
5. 1900 Watts disconnect terminals A,B,C,D

A. Black Do Not Disconnect (Common)

B. Red Do Not Disconnect

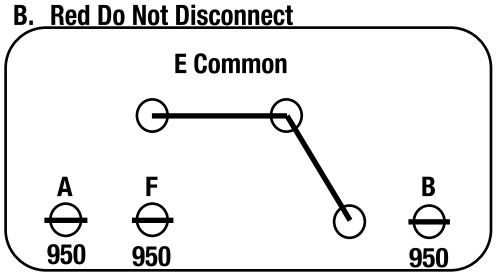

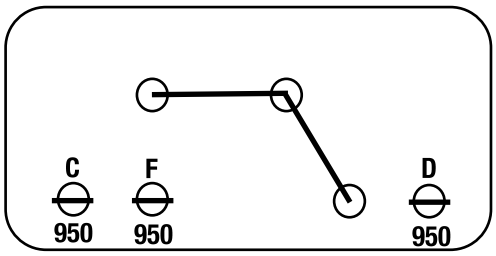

END VIEW OF ELEMENT

SHOWING QUICK CONNECT TERMINALS

975 • 1426 • 1900 • 2374 • 2850

WATTAGES AVAILABLE IN ONE UNIT

Wiring Diagram for KBP2406 240 Volt 5700 Watt

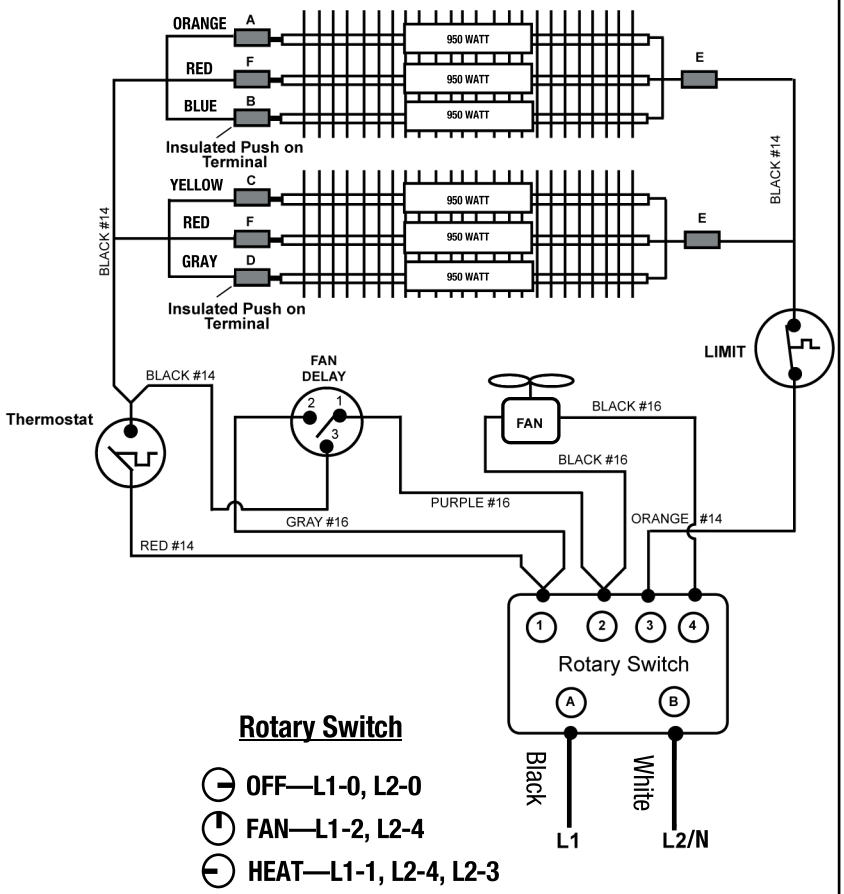

Rotary Switch

- OFF—L1-0, L2-0
- FAN—L1-2, L2-4
- HEAT—L1-1, L2-4, L2-3

Wiring Diagram# KBP2406 240 Volt 5700 Watt unit heater

KBP2406-3MP / KBP 2006-3MP WIRING DIAGRAMS

3-Phase to 1-Phase Diagram

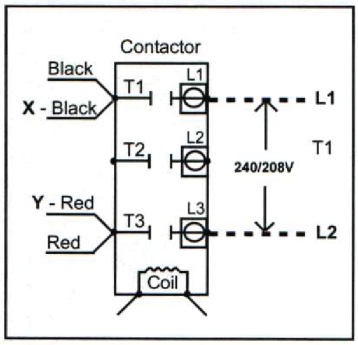

1. Factory wired for 3-Phase.
2. For conversion to 1-Phase:
   a) Move wire **X - Black** from T2 to T1.
   b) Move wire **Y - Red** from T2 to T3.
   c) Make power connections to L1 & L3.

Field Wattage Selection

1. 3-Phase

a) 5700 Watts factory wired
b) 2850 Watts- disconnect **B, E, H**

2. 1-Phase

a) 5700 Watts factory wired
b) 4750 Watts - disconnect **H**
c) 3800 Watts - disconnect **H, B**
d) 2850 Watts - disconnect **H, B, E**
e) 1900 Watts - disconnect **H, C, E, A**

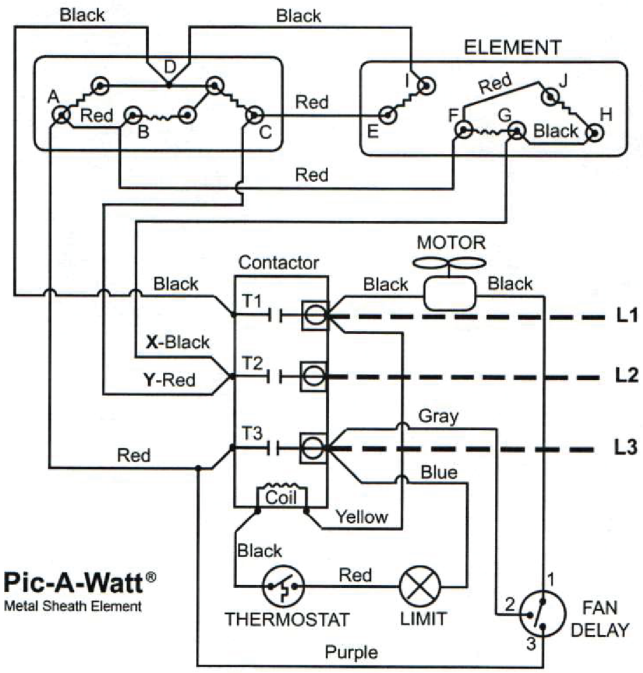

Pic-A-Watt®
Metal Sheath Element

KBP2406-3MP and KBP2006-3MP
1900 • 2850 • 3800 • 4750 • 5700
WATTAGES AVAILABLE IN ONE UNIT

NRTL /C

KBP2704 WIRING DIAGRAMS

INSTALLATION INSTRUCTIONS

This heater is shipped from the factory wired for maximum wattage of 4000 Watts at 277 Volts. To reduce the wattage unplug (disconnect) an insulated push on terminal and wrap with electrical tape to prevent the possibility of electrical contact with other parts.

Field Wattage Selection

1. 4000 Watts factory wired
2. 3000 Watts disconnect terminal **A**
3. 2000 Watts disconnect terminals **A,D**
4. 1000 Watts disconnect terminals **A,B,D**

E - Black **Do Not Disconnect** *(Common)*

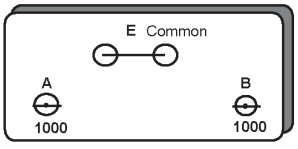

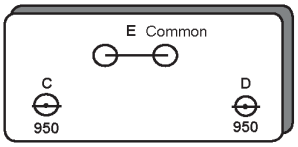

END VIEW OF ELEMENT SHOWING
QUICK CONNECT TERMINALS

1000 • 2000 • 3000 • 4000
WATTAGES AVAILABLE IN ONE UNIT

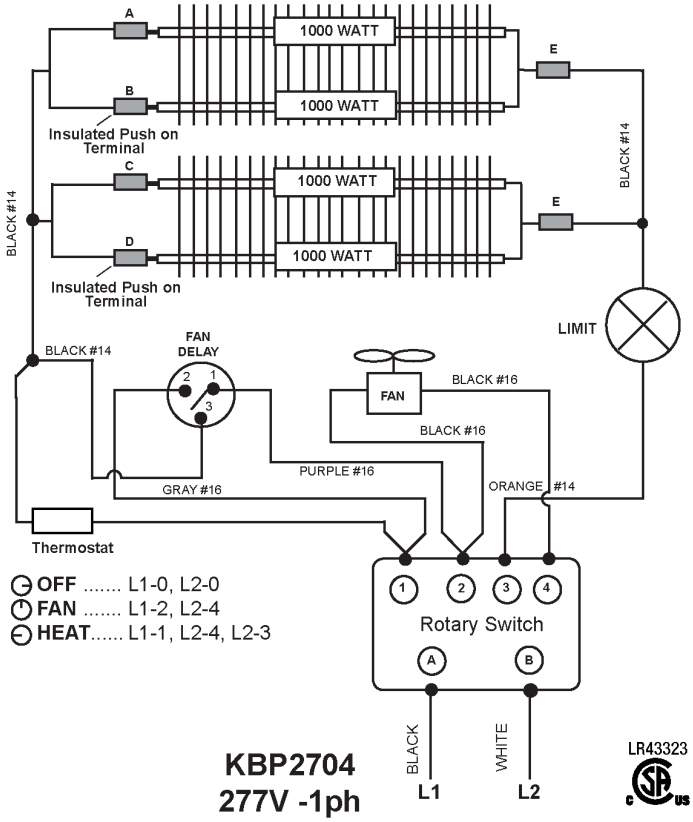

KBP2704
277V -1ph

LR43323

KBP4804-3MP / KBP4806-3MP WIRING DIAGRAMS

KBP4804-3MP and KBP4806-3MP

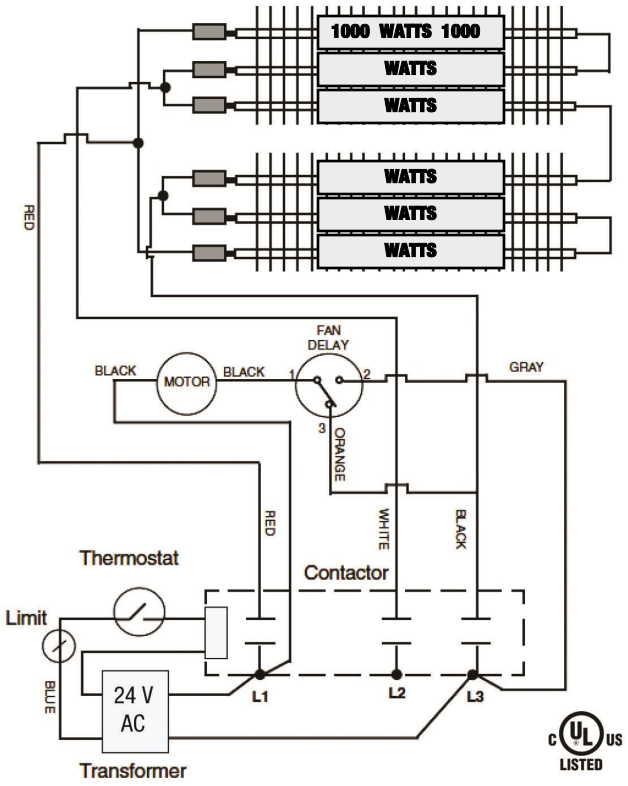

MAINTENANCE AND WARRANTY

The high quality and superior design of the Pic-a-Watt heater will provide years of trouble free performance. Each year the heater should be checked and cleaned for lint and dust accumulation. We recommend using a soft bristled brush such as a paint brush to assist in removing contaminants from the heater. The motor is permanently lubricated and does not need servicing. King Electrical Mfg. Co. will repair or replace, with out charge any KBP heater found to be defective or malfunctioning for five years after purchase to the original owner. For a warranty claim call King at **1-800-603-5464**, do not take the heater back to the store purchased from.

TROUBLESHOOTING GUIDE

Problem	Cause	Solution
Fan stays on when heat shuts off	Fan delay cycles ON/OFF until elements are cool	Heater is operating correctly
Heating element does not glow red	Heating element is made of stainless steel and will not glow red to produce heat	Heater is operating correctly
Do not feel heat or air flow	No power to heater	Check power connections/connect heater to power supply
	Desired room temperature is reached	Thermostat will shut off once desired room temperature is reached. Heater is operating correctly
	Heater does not heat area in front of heater, it will disperse heat throughout room to heat entire space	Heater is operating correctly
Oil drip from heater	Over fill of oil reservoir in motor or angle of heater is too	Will stop once over fill is purged. Reduce angle of heater