Hurricane®

24" / 30" / 36" / 42" HIGH VELOCITY METAL DRUM FAN

Product
#736485
#736486
#736487
#736488

OWNER'S MANUAL

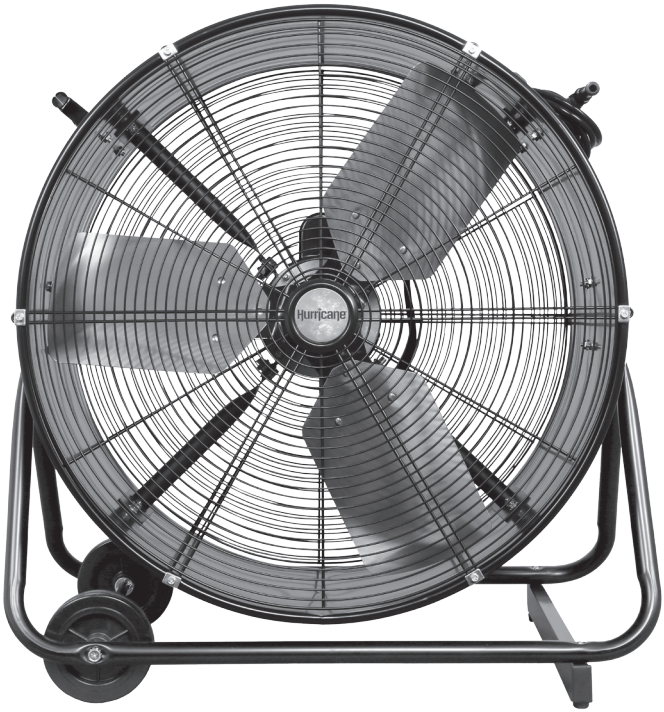

READ AND SAVE THESE INSTRUCTIONS

Note: Pictures in the manual are for reference only.

HIGH VELOCITY

TECHNICAL SPECIFICATIONS

ITEM NO.	SIZE	VOLTS/Hz	CURRENT (A)	CFM	RPM
736485	24″	120V/60Hz	3.4	7195	850
736486	30″	120V/60Hz	3.9	9295	850
736487	36″	120V/60Hz	5.3	16090	850
736488	42″	120V/60Hz	5.3	17820	850

CAUTION

Read instructions carefully for safe operation.

SAFETY INFORMATION

WARNING

1. Unplug the fan before moving it or performing maintenance.
2. DO NOT touch the fan when your hands are wet.
3. Those who are not qualified electricians should not disassemble, repair or rebuild the fan.
3. Unplug the fan when it is not in use.
4. DO NOT unplug the fan by holding the cable cord. Unplug by holding the plug.
5. DO NOT use the fan when there is damage to the cable cord or plug.
6. DO NOT use the fan with extension cord.
7. DO NOT use the fan close to fire.
8. DO NOT insert your hand or other objects into the guard or the movable parts.
9. To reduce the risk of fire or electric shock, do not use this fan with any solid-state speed control device.
10. If the supply cord is damaged, it has to be replaced by the manufacturer, its service agent or similarly qualified persons in order to avoid hazard.
11. DO NOT use this fan outdoor.

CAUTION

1. Unplug the fan from the socket and clean it with a soft cloth.
2. DO NOT immerse the fan.
3. Fit the guard onto fan before starting up the fan.
4. This fan is not intended for use by people (including children) with reduced physical, sensory or mental capabilities or lack of experience and knowledge unless they have been given supervision or instruction concerning use of the fan by a person responsible for their safety. Supervise children to ensure they do not play with the fan.

CARE AND MAINTENANCE

Unplug the appliance before cleaning. Don't use any water for cleaning metal surfaces. Slightly moisten a cloth and then wipe off the surfaces of the fan. In order to remove the dust from the grill, use a vacuum cleaner or remove the front grill by removing the securing screw on the edge of the grill with a screwdriver. After cleaning, remount the grill. After doing this, fasten the securing screw on the edge of the grill.

WHEELS ASSEMBLY INSTRUCTIONS

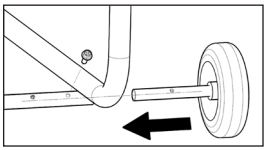

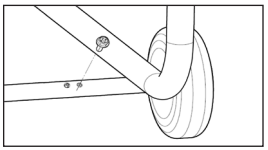

The 24" fan (Item #736485) is fully assembled. When you get from the package carton.

The 30" fan (Item #736486), the 36" fan (Item# 736487) and the 42" fan (Item# 736488) need to assemble the wheel after your getting from the package carton.

1. Insert the two wheels into the two holes on the bracket. (1)
2. Insert the screw to the hole on the wheel shaft then tighten it. (2)

OPERATING INSTRUCTIONS

1. Place the fan on a safe, flat surface where it can not fall or be pulled by the cord.
2. Plug unit into electrical outlet.
3. Select preferred speed (1-Low, 2-High) by rotating or pressing the switch knob or button on the control box.
4. Always turn off and unplug fan after using.

PARTS DIAGRAM

for 736486, 736487 and 736488

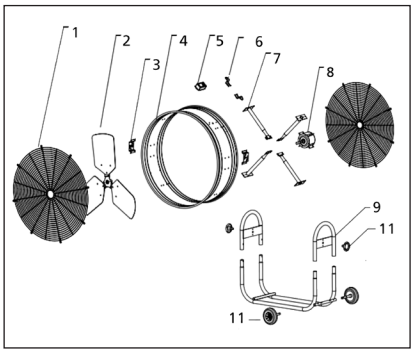

for 736485

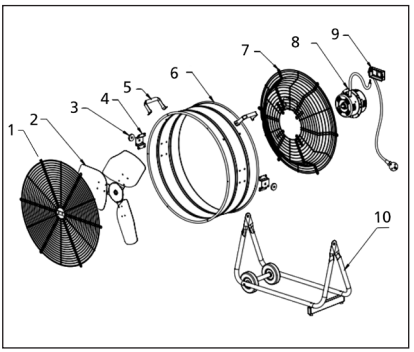

PARTS LIST

PART NO.	DESCRIPTION	QTY
1	Grill	2
2	Blade	1
3	U shape bracket	2
4	Drum body	1
5	Switch box	1
6	Power cord winding hook	2
7	Motor supporting tube	4
8	Motor	1
9	Bracket	1
10	Adjustive plastic knob	2
11	Wheel	2

PART NO.	DESCRIPTION	QTY
1	Grill	1
2	Blade	1
3	Skidproof plastic knob	2
4	U shape bracket	2
5	Handle	2
6	Drum body	1
7	Rear grill	1
8	Motor	1
9	Switch box	1
10	Bracket	1

Hurricane®

24"/30"/36"/42" HIGH VELOCITY METAL DRUM FAN

PRODUCT
#736485
#736486
#736487
#736488

Use a "QR Code App" on your smart phone to access our website and browse our entire product offering or go to"

www.hurricane-fans.com

Exclusively distributed by:

Sunlight Supply, Inc.

INNOVATING SINCE 1995

SunlightSupply.com