# SPECIFICATIONS

# DE Boss™ - Double-Ended Reflector

Item #904934

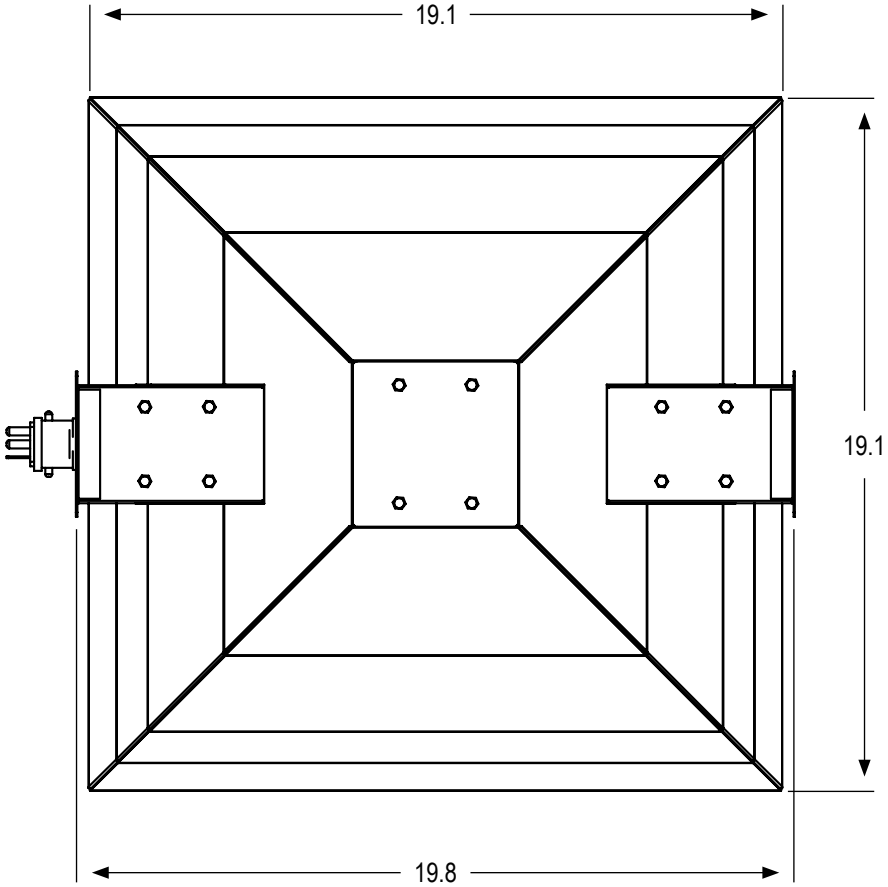


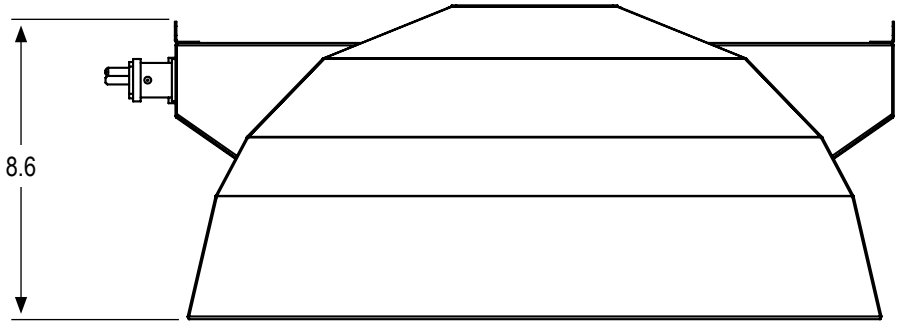


*REFLECTOR WEIGHT: 7.3 lbs*

• = yes

| | |
|---|---|
| • | ETL LISTED |
| | NOT ETL LISTED |
| | **Tested to UL Standard #1598** |
| | AIR-COOLED |
| | ACCEPTS GLASS |
| | HINGED GLASS FRAME |
| • | DETACHABLE LAMP CORD |
| • | 600 VOLT RATED CORD |
| • | FABRICATED IN USA* |
| • | 5 YEAR WARRANTY |
| **BALLAST COMPATIBILITY** | |
| • | HPS |
| | MH |
| | **Max. Wattage**: 1000 |
| **LAMP COMPATIBILITY** | |
| • | HPS |
| | MH |
| | **Max. Wattage**: 1000 |
| **LAMP POSITION** | |
| • | HORIZONTAL |
| | VERTICAL |
| **LAMP SOCKET TYPE** | |
| • | INTEGRATED DOUBLE-ENDED |
| | INTEGRATED 5KV MOGUL BASE |

** with US and globally sourced parts*

Sunlight Supply, Inc.
National Garden Wholesale®

*This document is not intended to be used for installation purposes. We cannot cover all specific applications or anticipate all requirements. All specifications are subject to change without notice.*