Quest PowerDry 4000 *Pro*

Installation, Operation and Maintenance Instructions

– Read and Save These Instructions –

This manual is provided to acquaint you with the dehumidifier so that installation, operation and maintenance can proceed successfully. Ultimate satisfaction depends on the quality of installation and a thorough understanding of this equipment. The dehumidifier is built around tested engineering principles and has passed a thorough inspection for quality of workmanship and function.

Quest PowerDry 4000 *Pro:*

- High capacity – 176 pints/day @ AHAM (22 Gallons)
- Onboard humidistat for continuous humidity control
- High energy efficiency – Requires only 10 Amps of electricity
- Pleated media filter – Standard MERV 11 filtration reduces dust
- Optional high-efficiency filter – Removes 95% of one-micron particles
- Multiple Ducting Options - 12″ inlet, 10″ outlet.
- Reservoir pump system – Strong and dependable, 20 ft of lift
- Solid State Controls - Easy to read and operate
- Digital hour meter – Easy to read for more accurate billing
- 25-ft power cord – No need for extension cords
- 30-ft drain hose – Pump condensate to sinks or drains

Water Removal Rate (Pints/Day)	
176 pints	**80˚F, 60% (AHAM)**

QUEST

Therma-Stor LLC
Driven by performance. Powered by design.™

4201 Lien Rd
Madison, WI 53704
www.QuestProtect.com

Phone 608-237-8400
Toll-Free 1-866-933-7486
sales@QuestProtect.com

Table of Contents

Safety Precautions 3
1. Specifications 4
2. Operation..... 4
2.1 Transporting 4
2.2 Location..... 4
2.3 Electrical Requirements..... 5
2.4 Condensate Removal..... 5
2.5 Ducting..... 5
2.6 POWER Button..... 5
2.7 PURGE Button 5
2.8 Humidistat 6
2.9 HOURS Button 6
2.10 DEFROST Light 6
2.11 Defrost Cycle 6
2.12 Low Pressure Control 6
3. Maintenance 7
3.1 Air Filter 7
3.2 Storage..... 7
4. Service 7
4.1 Warranty 7
4.2 Technical Description..... 8
4.3Troubleshooting 8
4.4 Refrigerant Charging..... 10
4.5 Blower Replacement 10
4.6 Thermistor Replacement..... 10
4.7 Condensate Pump Replacement..... 11
4.8 Gravity Drain Option 11
5. Wiring Diagram 12
6. Service Parts..... 13
Warranty 14

Safety Precautions

Read the installation, operation and maintenance instructions carefully before installing and operating this device. Proper adherence to these instructions is essential to obtain maximum benefit from your Quest PowerDry 4000 *Pro*.

READ AND SAVE THESE INSTRUCTIONS

- The device is designed to be installed INDOORS IN A SPACE THAT IS PROTECTED FROM RAIN AND FLOODING.
- Install the unit with space to access the back or side panels for maintenance and service. DO NOT INSTALL UNIT WITH THE SERVICE PANELS INACCESSIBLE.
- Avoid directing the discharge air at people, or over the water in pool areas.
- If used near a pool or spa; be certain there is NO chance the unit could fall into the water, be splashed and that it is plugged into a GFI GROUND FAULT INTERRUPT OUTLET.
- **DO NOT use the device as a bench or table.**
- DO NOT place the device directly on structural members. Provide vibration isolation in order to minimize operational vibration and/or noise.
- A drain pan MUST be placed under the unit if installed above a living area or above an area where water leakage could cause damage

1. Specifications

Part No.	4031120
Power	10 amps, 115 Vac, Grounded
Water Removal	176 pints/day @ AHAM 80°F, 60% RH
Blower	380 CFM without external ducting
Refrigerant Charge	2 lbs., 2 oz. R410a
Operating Range	33°F to 105°F
Filters:	15.5″ x 19.5″ x 1.75″ Pleated Media MERV-11
Duct Options:	Inlet - 12″ Flex-Duct Outlet - 10″ Lay-Flat
Warranty	Five years; 1st year 100% of Parts and Labor 2nd-5th year 100% of Parts of sealed refrigeration system.
Dimensions	Width 20″, Depth 23″, Height 40″
Weight	135 lbs.

2. Operation

Place dehumidifier inside structure, place condensate hose into a drain, or a very large container, and turn on. To decrease drying times, make sure all windows and doors are closed to the outside and seal off the wet area from any unaffected areas.

2.1 Transporting

The Quest PowerDry 4000 *Pro* must always be upright when transported by vehicle. It may be tipped on to its handle and back for loading and moving by hand.

2.2 Location

⚠WARNING

Note the following precautions when locating the *Quest PowerDry 4000 Pro*:

- It is designed to be used **INDOORS ONLY.**
- If used in a wet area, plug it into a **GROUND FAULT INTERRUPTER.**
- **DO NOT** use the Quest PowerDry 4000 *Pro* as a bench or table.

- It must always be used in the upright position.
- The air inlet on top and the front outlet must be at least 1 foot from walls and other obstructions to air flow.
- If the humid area is very large, dehumidification can be improved by adding an outlet duct to circulate air to stagnant areas (see Sec. 2.5).

2.3 Electrical Requirements

The Quest PowerDry 4000 *Pro* can be plugged into a grounded 15 Amp circuit. At 80°F, 60% RH, it draws 10 Amps. Due to the high percentage of a 15 Amp circuit's capacity that the unit uses, the circuit should be dedicated to running it only. Amp draw decreases at lower loads and increases at higher loads. At extremely high loads, a 20 Amp circuit may be required.

If an extension cord is required, it must have a minimum of 12 gauge conductors if 25 feet long or less and 10 gauge conductors if greater than 25 feet long.

2.4 Condensate Removal

The Quest PowerDry 4000 *Pro* is equipped with an internal condensate pump to remove the water that is condensed during dehumidification. This allows the condensate to be pumped 30' with the attached hose. If the condensate must be pumped more than 20 feet above the unit, a second pump must be added to relay the condensate.

2.5 Ducting

A detachable rectangular exhaust collar is supplied that will allow 10" round lay-flat duct to be attached to the Quest PowerDry 4000 Pro outlet.

To attach ducting to a collar, put the plastic duct end through the collar center and roll the duct end outward so that it overlaps the outside of the collar. The duct and collar may then be quickly attached to the Quest PowerDry 4000 Pro by snapping the collar over the four screws at the blower outlet.

2.6 Power Button

Press the POWER button to turn the dehumidifier on or off. When starting the dehumidifier the display will show the accumulated hours. Press the POWER button again to turn the dehumidifier off. The display will also power off.

2.7 Pump Purge Button

During normal operation the pump automatically cycles every four minutes. Press the PURGE button to remove condensate manually from the reservoir. There are several ways to manually remove water from the reservoir:

1. Press the PURGE button once and the pump will run for 20 seconds
2. Press and hold the PURGE button and the pump will run for up to 30 seconds
3. Press the PURGE button while the dehumidifier is powered off and the pump will run for 30 seconds.

Always manually purge the water reservoir before transport or storage. Turn off the power and allow the plugged in dehumidifier to rest 15 minutes before the final purge.

2.8 Humidistat

Adjust the humidistat to the desired conditioned humidity. The humidistat has a range of 20% to 70% RH. "ON" will operate the unit continuously regardless of humidity.

2.9 Hours Button

Pressing the HOURS button displays the hour meter when the unit is turned off but plugged into power. To reset job hours, press and hold the HOURS button for 5 seconds when the unit is operating.

2.10 Defrost Light

The DEFROST light turns on when the unit is in defrost mode indicating when the compressor is off.

DRYING TIP: Air's ability to absorb moisture from wet surroundings and the Quest PowerDry 4000 Pro's ability to remove moisture from that air is greatly improved at higher temperatures. We recommend that the area to be dried be heated to over 70°F if possible. Less drying time will be required and efficiency will improve.

2.11 Defrost Cycle

If the evaporator coil's refrigerant temperature drops below the defrost set point, due to excessive frost formation, the thermistor activates the solid state control and the defrost light. The control cycles the compressor "off" and "on" by monitoring thermistor temperature. The air mover will continue to run, causing air to flow through the evaporator coil. The air will melt the ice that formed on the evaprator.

When the air temperature and/or humidity increases, the evaporator temperature will rise and the thermistor will end the defrost cycle restarting the compressor.

If the evaporator temperature does not reach the desired temperature, the compressor will start after 15 minutes. The system will start a timed defrost cycle. The timed defrost cycle ensures the unit will continue to remove water from the air in cool ambient conditions.

2.12 Low Pressure Control

If the low side refrigerant drops into a low pressure situation that may harm the compressor, the solid state controls will sense the refrigerant conditions and shut off the compressor until the system automatically resets itself.

The solid state control monitors the refrigerant conditions to ensure the system is protecting compressor at all times. The control protects the compressor from damage by monitoring cycles, pressures, and system performance.

3 Maintenance

3.1 Air Filter

The Quest PowerDry 4000 Pro is equipped with a pleated fabric air filter that must be checked regularly. The standard filter is a MERV-11 high efficiency filter. Operating the unit with a dirty filter will reduce the dehumidifier's capacity and efficiency and may cause the compressor to cycle off and on unnecessarily on the defrost control.

IMPORTANT: DO NOT operate the unit without the filter or with a less effective filter as the heat exchanger and coils inside the unit could become clogged and require disassembly to clean.

3.2 Storage

There are two issues to consider when the Quest PowerDry 4000 *Pro* is stored between uses and both pertain to the water trapped in the unit: damage caused by freezing and biological growth. The effect of the trapped water can be greatly reduced if precautions are taken to remove as much as possible before storage.

1. Use the pump purge switch (see Sec. 2.7 and Fig. 4) to reduce the water level in the reservoir.
2. Stretch the hose flat to drain it completely.

If the unit will not be exposed to freezing temperatures, an alternative way to reduce biological growth is to flush the unit with a bio-fungicide that is approved for use with copper, aluminum and polyethylene. To flush:

1. Run the hose to a drain.
2. Plug in the unit but do not turn it on.
3. Remove the air filter. Slowly pour a quart of the chemical through the top grille so that it drains into the black plastic slots.
4. Hold in the pump purge switch to reduce the water level in the reservoir.
5. Flush with water.

4 Service

⚠CAUTION

CAUTION: Servicing the *Quest PowerDry 4000 Pro* with its high pressure refrigerant system and high voltage circuitry presents a health hazard that could result in death, serious bodily injury, and/or property damage. Only qualified service people should service this unit.

4.1 Warranty

A warranty certificate has been enclosed with this unit; read it before any repair is initiated.

If a warranty repair is required, call the factory first at 1-800-533-7533 for warranty claim authorization and technical assistance.

4.2 Technical Description

The Quest PowerDry 4000 *Pro* uses a refrigeration system similar to an air conditioner's to remove heat and moisture from incoming air, and to add heat to the air that is discharged (see Fig. 2).

Hot, high pressure refrigerant gas is routed from the compressor to the condenser coil (see Figure 2). The refrigerant is cooled and condensed by giving up its heat to the air that is about to be discharged from the unit. The refrigerant liquid then passes through a filter/drier and capillary tubing which cause the refrigerant pressure and temperature to drop. It next enters the evaporator coil where it absorbs heat from the incoming air and evaporates.

The evaporator operates in a flooded condition, which means that all the evaporator tubes contain liquid refrigerant during normal operation. A flooded evaporator should maintain constant pressure and temperature across the entire coil, from inlet to outlet.

The mixture of gas and liquid refrigerant enter the accumulator after leaving the evaporator coil. The accumulator prevents any liquid refrigerant from reaching the compressor. The compressor evacuates the cool refrigerant gas from the accumulator and compresses it to a high pressure and temperature to repeat the process.

4.3 Troubleshooting

No dehumidification, neither hour meter display nor compressor run and POWER button does not turn ON.

1. Unit unplugged or no power to outlet
2. Defective control board
3. Loose connection in internal wiring

No dehumidification, neither hour meter display nor compressor run with POWER button ON.

1. Defective control board
2. Loose connection in internal wiring

Some dehumidification, air mover runs continuously but compressor only runs sporadically.

1. Unit is in defrost cycle, DEFROST light on
2. Check to make sure humidistat is set high enough
3. Defrost thermistor defective or loose
4. Loose connection in compressor circuit
5. Defective compressor overload
6. Defective compressor
7. Defective relay
8. Low refrigerant charge

No dehumidification, air mover runs but compressor does not.

1. Bad connection in compressor circuit

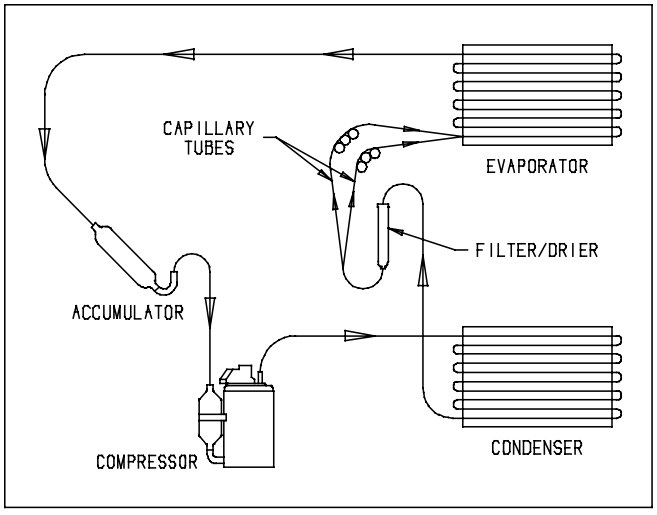

Figure 2: Refrigeration system of Quest

2. Check to make sure humidistat is set high enough
3. Safety float switch closed, check pump reservoir
4. Defective compressor capacitor
5. Defective compressor overload
6. Defective compressor
7. Defective control board
8. Low refrigerant charge

Air mover does not run. Compressor runs briefly but cycles on and off.

1. Loose connection in blower circuit
2. Obstruction prevents impeller rotation
3. Defective air mover
4. Defective control board.

Unit removes some water but not as much as expected.

1. Air temperature and/or humidity have dropped
2. Check to make sure humidistat is set high enough
3. Humidity meter and/or thermometer used are out of calibration
4. Unit has entered defrost cycle
5. Air filter dirty
6. Defective defrost thermistor
7. Low refrigerant charge
8. Air leak such as loose front cover
9. Defective compressor
10. Restrictive exhaust or inlet ducting

Unit runs but does not pump water.

1. Hose kinked or plugged
2. Pump motor defective
3. Pump check valve plugged
4. Bad connection in pump circuit
5. Hose disconnected internally
6. Defective control board

Unit pumps water automatically but not when PURGE button is pushed.

1. Bad connection in PURGE button circuit
2. Defective control board

Evaporator coil frosted continuously, low dehumidifying capacity.

1. Defrost thermistor loose or defective
2. Low refrigerant charge

Compressor runs with POWER button OFF.

1. Defective relay
2. Defective control board
3. Upper housing not sealed to tower

4.4 Refrigerant Charging

If the refrigerant charge is lost due to service or leak, a new charge must be accurately weighed in. If any of the old charge is left in the system, it must be removed before weighing in the new charge. Refer to the unit nameplate for the correct charge weight and refrigerant type.

4.5 Blower Replacement

The blower has a PSC motor and internal thermal overload protection. If defective, the complete assembly must be replaced.

1. Unplug power cord
2. Remove the front cover
3. Remove the 5 screws attaching blower inlet ring
4. Remove the 4 screws mounting impeller to underside of base plate
5. Disconnect the blower leads
6. Reassemble the new blower using the above procedure in reverse

4.6 Thermistor Replacement

The defrost thermistor probe is inserted into the coil measuring coil temperatures and reacts accordingly.

To replace thermistor:

1. Remove top cover and filter
2. Remove 5 screws holding front filter bracket
3. Remove the filter bracket and foam block underneath
4. Remove the 4 screws holding the control panel in place
5. Pull the thermistor probe from the evaporator coil, reinsert the new probe into the existing hole
6. Route the thermistor wire along the side of the heat exchanger
7. Detach and remove old thermistor wire from board
8. Attach thermistor probe wire onto board
9. Reassemble unit

4.7 Condensate Pump Replacement

The internal condensate pump removes water that collects in the reservoir.

To replace the condensate pump:

1. Unplug the unit
2. Remove the rear skidplate
3. Unplug the pump wires from the wire harness
4. Remove the condensate hose and the screw attaching the pump bracket to the base
5. Replace the pump, hose, wiring, bolts, and cover in the reverse order

4.8 Gravity Drain Option

If the condensate pump fails and cannot be replaced immediately, the Quest PowerDry 4000 Pro can be used by draining by gravity.

1. Unplug the unit and remove the front cover.
2. Push the plastic plug on the right side (see Fig. 4) out from inside the unit.
3. Locate the heavy vinyl hose that connects the drain pan to the condensate pump. Pull the end out of the pump.
4. Remove tie wrap holding drain tube to suction line.
5. Push that end of the vinyl hose through the hole in the right side.
6. Connect a garden hose and run it to a drain. Keep the hose as flat to the floor as possible to avoid air pockets that would hinder draining. Placing the unit on something above the floor will also improve draining.

5. Wiring Diagram

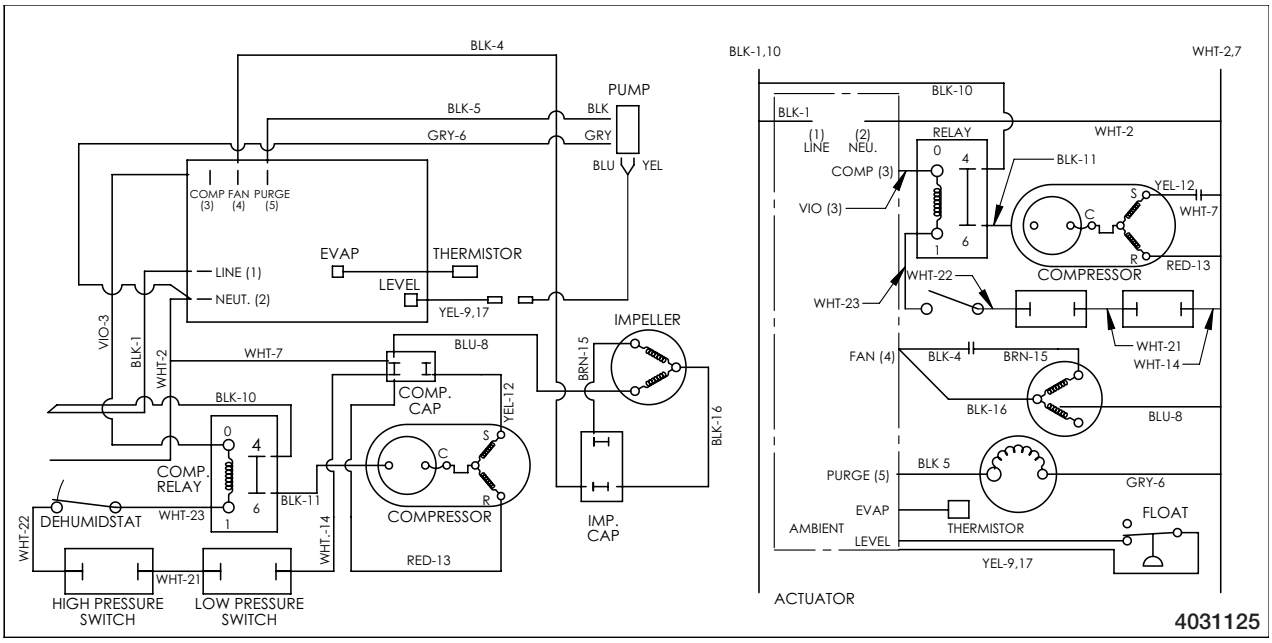

Figure 3: Electrical schematic of Quest PowerDry 4000 *Pro*

6 Service Parts

Item	Description	Qty	Part No.
1	Top Cover	1	4028583
2	Top Cover Hinge	2	4027267
3	Wheel 12″ Gray	2	4026304
4	Cotter Pin 3/32″	2	1284404
5	Air Filter 1.75 x 15.5 x 19.5	1	4021475
6	Hose Vinyl 0.56 ID x 24	1	4029894
7	Hose Vinyl 0.38 ID	1	4021909
8	Hose Vinyl 0.25ID x 33	1	4024916
9	Coupling Body 0.25 Tube	1	4024910
10	Coupling Insert 0.38 Tube	1	4023080
11	Control Board	1	4033674
12	Capacitor Compressor *55mfd 370V*	1	4029606
13	Capacitor Impeller *15mfd 371V*	1	4033031-07
14	Thermistor	1	4032644
15	Cord	1	4032315
16	Compressor 11.9KBTU R410a	1	4029186
17	Overload Compressor	1	4029177
18	Evaporator Coil	1	4028565

Item	Description	Qty	Part No.
19	Condenser Coil	1	4028566
20	Condensate Pump	1	4023649
21	Fan Motorized Impeller	1	4026657
22	Inlet Ring	1	4028564
23	Wire Duct Collar	1	4028593
24	Relay SPST 100/120V 25A	1	1970010
25	Filter Drier (not shown)	1	4029510
26	Wire Harness (not shown)	1	4031121
27	Handle	1	4026094
28	Bolt M10-1.5 X 35	2	1177792
29	Washer M10 X 30	2	4025517
30	Hex Lock Nut M10-1.5	2	1223780
31	Humidity Controller	1	4027172
32	Knob	1	4021495

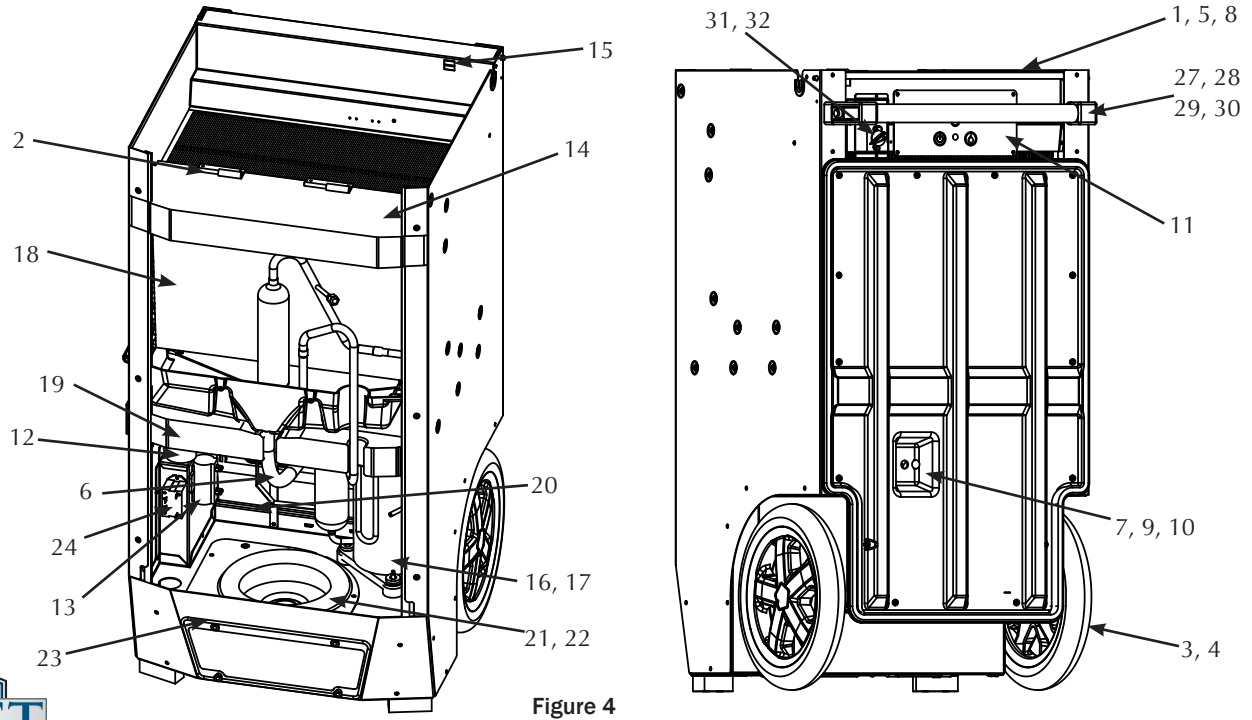

Figure 4

Quest PowerDry 4000 *Pro* Dehumidifier Limited Warranty

Warrantor:

Therma-Stor LLC
4201 Lien Rd
Madison, WI 53704
Telephone: 1-866-933-7486

Who Is Covered: This warranty extends only to the original end-user of the Quest PowerDry 4000 *Pro* dehumidifier, and may not be assigned or transferred.

Year One: Therma-Stor LLC warrants that, for one (1) year the Quest PowerDry 4000 *Pro* dehumidifier will operate free from any defects in materials and workmanship, or Therma-Stor LLC will, at its option, repair or replace the defective part(s), free of any charge.

Year(s) Two Through Five: Therma-Stor LLC further warrants that for a period of five (5) years, the condenser, evaporator, and compressor of the Quest PowerDry 4000 *Pro* dehumidifier will operate free of any defects in material or workmanship, or Therma-Stor LLC, at its option, will repair or replace the defective part(s), provided that all labor and transportation charges for the part(s) shall be borne by the end-user.

End-User Responsibilities: Warranty service must be performed by a Servicer authorized by Therma-Stor LLC. If the end-user is unable to locate or obtain warranty service from an authorized Servicer, he should call Therma-Stor LLC at the above number and ask for the Therma-Stor Service Department, which will then arrange for covered warranty service. Warranty service will be performed during normal working hours.

The end-user must present proof of purchase (lease) upon request, by use of the warranty card or other reasonable and reliable means. The end-user is responsible for normal care. This warranty does not cover any defect, malfunction, etc. resulting from misuse, abuse, lack of normal care, corrosion, freezing, tampering, modification, unauthorized or improper repair or installation, accident, acts of nature or any other cause beyond Therma-Stor LLC's reasonable control.

Limitation and Exclusions: If any Quest PowerDry 4000 *Pro* Dehumidifier part is repaired or replaced, the new part shall be warranted for only the remainder of the original warranty period applicable thereto (but all warranty periods will be extended by the period of time, if any, that the Quest PowerDry 4000 *Pro* Dehumidifier is out of service while awaiting covered warranty service).

UPON THE EXPIRATION OF THE WRITTEN WARRANTY APPLICABLE TO THE Quest PowerDry 4000 *Pro* OR ANY PART THEREOF, ALL OTHER WARRANTIES IMPLIED BY LAW, INCLUDING MERCHANTABILITY AND FITNESS FOR A PARTICULAR PURPOSE, SHALL ALSO EXPIRE. ALL WARRANTIES MADE BY THERMA-STOR LLC ARE SET FORTH HEREIN, AND NO CLAIM MAY BE MADE AGAINST THERMA-STOR LLC BASED ON ANY ORAL WARRANTY. IN NO EVENT SHALL THERMA-STOR LLC, IN CONNECTION WITH THE SALE, INSTALLATION, USE, REPAIR OR REPLACEMENT OF ANY Quest PowerDry 4000 *Pro* OR PART THEREOF BE LIABLE UNDER ANY LEGAL THEORY FOR ANY SPECIAL, INDIRECT OR CONSEQUENTIAL DAMAGES INCLUDING WITHOUT LIMITATION WATER DAMAGE (THE END-USER SHOULD TAKE PRECAUTIONS AGAINST SAME), LOST PROFITS, DELAY, OR LOSS OF USE OR DAMAGE TO ANY REAL OR PERSONAL PROPERTY.

Some states do not allow limitations on how long an implied warranty lasts, and some do not allow the exclusion or limitation of incidental or consequential damages, so one or both of these limitations may not apply to you.

Legal Rights: This warranty gives you specific legal rights, and you may also have other rights which vary from state to state.